18000 SERIES
SNAP-ACTION MOMENTARY PUSHBUTTON SWITCHES
Overview

MODEL STRUCTURE

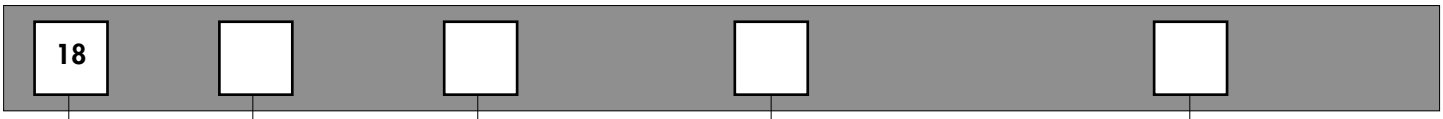

SERIES

Number of poles

3	Single pole
4	Double pole

Terminals

Blank	Solder lugs or straight PC depending on model
W	Right angle, horizontal mounting
WW	Right angle, vertical mounting
Y	Bracket mounting

Terminals and bushing

2	Straight PC terminals with Ø 6,35 (1/4) threaded bushing Straight PC terminals + bracket or right angle terminals with plain bushing
5	Solder lug terminals with Ø 6,35 (1/4) threaded bushing.
7	Solder lug terminals with Ø 6,35 (1/4) flatted bushing.
8	Solder lug terminals, snap-in mounting
9	Straight PC terminals with Ø 6,35 (1/4) flatted bushing.

Electrical function

5	ON	-	MOM

ABOUT THIS SERIES
On the following pages, you will find successively :
- specifications
- model structure of switches
- options in the same order as in above chart

Dimensions : first dimensions are in mm while inches are shown as bracketted numbers.

NOTICE : please note that not all combinations of above numbers are available.
Refer to the following pages for further information.

18000 SERIES
SNAP-ACTION MOMENTARY PUSHBUTTON SWITCHES
Overview

OPTIONS

D

Contact materials

AD Silver, gold plated
CD Brass, gold plated

Special options

X624 Shorter bushing and plunger
X662 Snap-in mounting and straight PC terminals

Other : specific bushings, etc... See following pages.

Bezels

For snap-in mounting models
U1200
U1210 for LED
For bracket mounting models
U3200

Plungers

-13 Ø 4 (.157), length 6 mm (.236)
Standard with threaded bushing
-6 Ø 3,1 (.122), length 5,85 mm (.230)
-3 Ø 4 (.157), length 5,5 mm (.216)
Standard with plain bushing
-5 Ø 3,1 (.122), length 6,3 mm (.248)

Caps

For Ø 4 (.157) plungers (-3, -13)
U900 Ø 5 (.196)
U1140 Ø 8 (.314)
U1720 Ø 9,4 (.370)
U480 Ø 10 (.393) - standard
U630 Ø 15 (.590)
U2430 Square
Height 4 (.157)
U2020 Square
Height 6 (.236)

For Ø 3,1 (.122) plungers (-5, -6)
U2400 Ø 5 (.196)
U2510 Ø 8 (.314)
U2130 Ø 9,4 (.370)
U2900 Ø 10 (.393)
U3400 Ø 15 (.590)
U910 Square
Height 4 (.157)
U2340 Square
Height 6 (.236)

Sealing boots are available to protect the switches against dust and water. They are presented in section N.

Mounting accessories : standard hardware supplied with all models with Ø 6,35 (1/4) threaded bushing :
2 hex nuts 8 mm (.314) across flats, 1 locking ring and 1 lockwasher.
Standard and special hardware available are presented in section N.

Packaging unit : 25 pieces for W, WW double pole and 18800 models
50 pieces for other models.

18000 SERIES
SNAP-ACTION MOMENTARY PUSHBUTTON SWITCHES
Specifications

ELECTRICAL SPECIFICATIONS

- Max. current/voltage rating with resistive load :
  - gold plated brass contacts : 100mA - 30VDC
  - gold plated silver contacts : 1A 120VAC, 1A 30VDC
- Initial contact resistance : 50 mΩ max.
- Insulation resistance : 1.000 MΩ min.
- Dielectric strength : 1.000 Vrms 50 Hz min.
- Electrical life : 60.000 cycles at full load

MATERIALS

- Case : PBT
- Actuator : polyamide, glass filled
- Bushing : brass, nickel plated
- Housing : stainless steel
- Bracket : tin plated steel
- Contacts
  AD : silver, gold plated
  CD : brass, gold plated
- Terminals seal : epoxy

GENERAL SPECIFICATIONS

- Total travel : 0,5 mm (.019)
- Torque : 1,25 Nm (.922 Ft.lb) max. applied to nut
- Operating temperature : -30°C to +65°C

18000 SERIES

SNAP-ACTION MOMENTARY PUSHBUTTON SWITCHES

Threaded bushing Ø 6,35 (1/4) : 18500 - 18700 - 18200

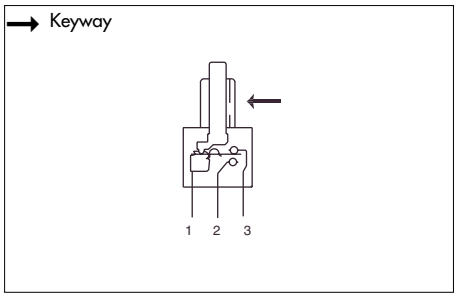

- Solder lug or straight PC terminals
- Epoxy sealed terminals standard

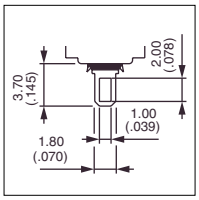

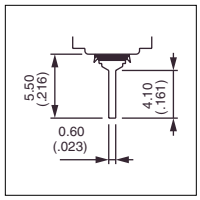

D

MODEL STRUCTURE

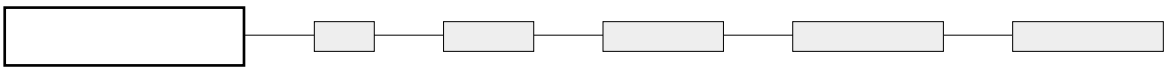

Shown with standard plunger (-13)

Solder lug terminals : 18500



	1-3	1-2
Single pole **18535**	ON	MOM
Double pole **18545**	ON	MOM

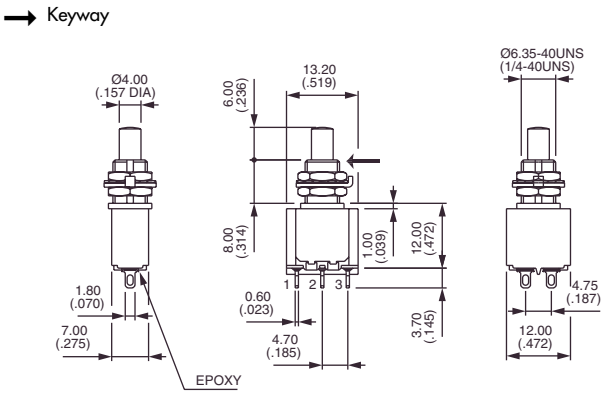

Flatted bushing - solder lug terminals : 18700



	1-3	1-2
Single pole **18735**	ON	MOM
Double pole **18745**	ON	MOM

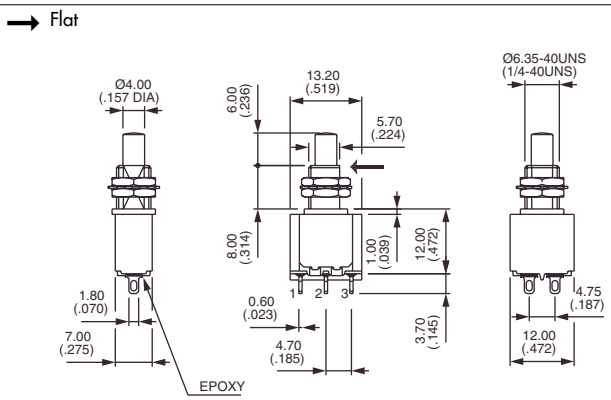

Straight PC terminals : 18200



	1-3	1-2
Single pole **18235**	ON	MOM
Double pole **18245**	ON	MOM

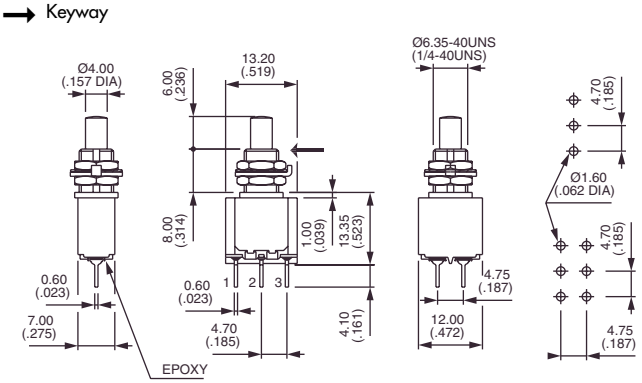

18000 SERIES

SNAP-ACTION MOMENTARY PUSHBUTTON SWITCHES

Threaded bushing Ø 6,35 (1/4) : 18900 - Snap-in mounting : 18800

MODEL STRUCTURE

D

Flatted bushing - straight PC terminals : 18900



	1-3	1-2
Single pole **18935**	ON	MOM
Double pole **18945**	ON	MOM

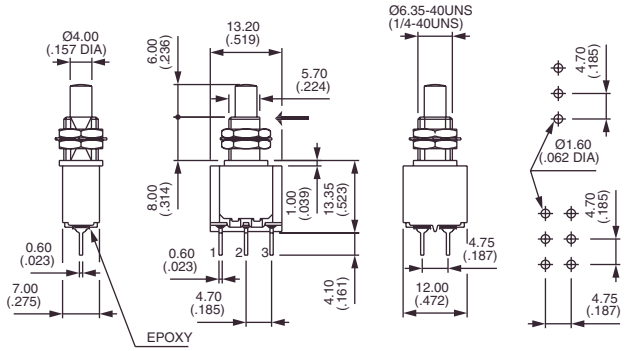

Snap-in mounting - solder lug terminals : 18800

Shown with cap U910 + U1200



	1-3	1-2
Single pole **18835**	ON	MOM
Double pole **18845**	ON	MOM

Available with straight PC terminals : see X662 under "Special options".

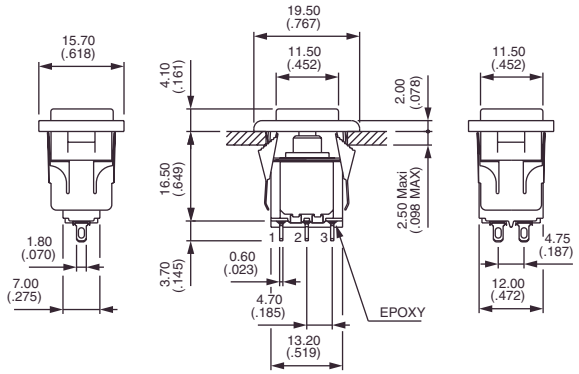

PANEL CUT-OUT

18500 - 18200

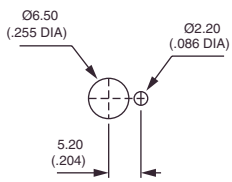

18700 - 18900

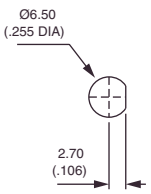

PANEL CUT-OUT

18800

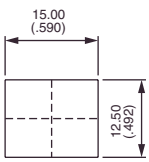

With bezel **U1200**

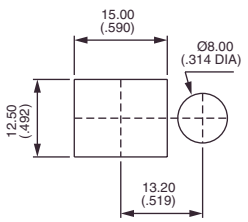

With bezel **U1210** for LED

18000 SERIES

SNAP-ACTION MOMENTARY PUSHBUTTON SWITCHES

Plain bushing : 18200Y - 18200W - 18200WW

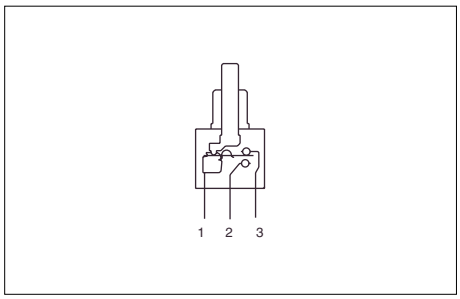

- Straight PC or right angle terminals
- Epoxy sealed terminals standard

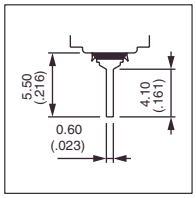

D

MODEL STRUCTURE

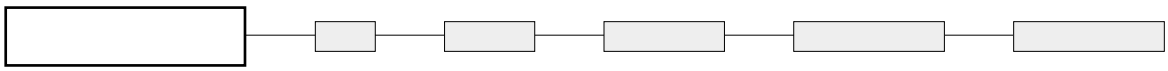

Shown with standard plunger (-3)

Straight PC terminals - bracket mounting - single pole 18230Y



18235Y

ON MOM

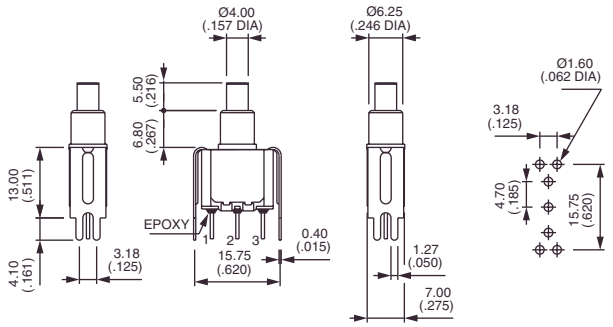

Straight PC terminals - bracket mounting - doube pole 18240Y



18245Y

ON MOM

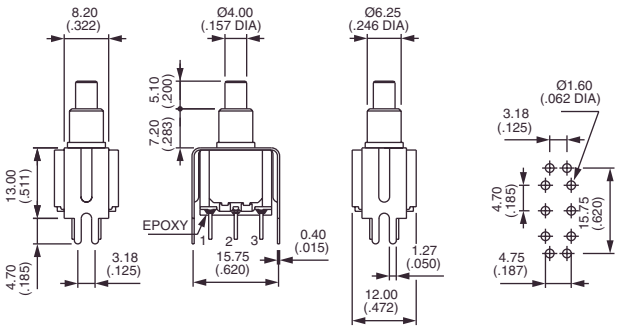

Right angle terminals - horizontal : 18200W



Single pole
18235W

ON MOM

Double pole
18245W

ON MOM

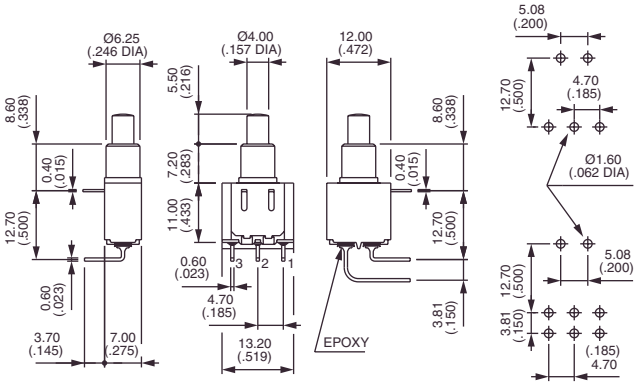

D

Right angle terminals - vertical : 18200WW



	1-3	1-2
Single pole **18235WW**	ON	MOM
Double pole **18245WW**	ON	MOM

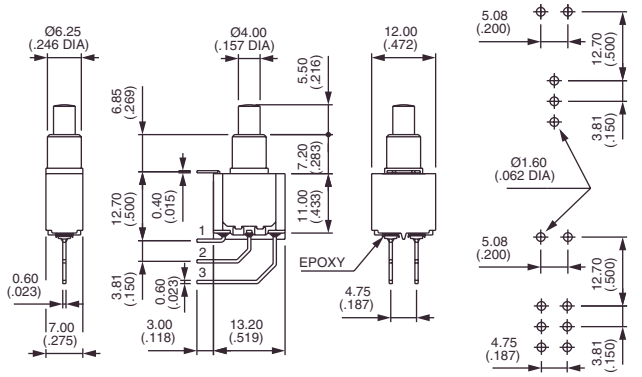

CONTACT MATERIALS

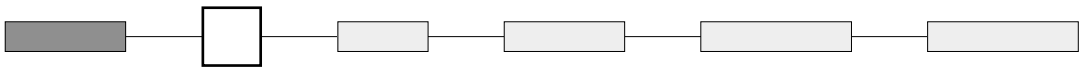

AD Silver, gold plated
CD Brass, gold plated

PLUNGERS

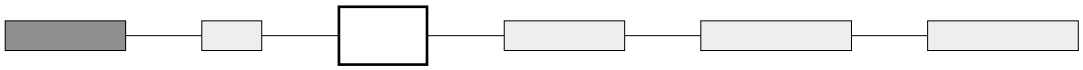

Dash compulsory before plunger code.

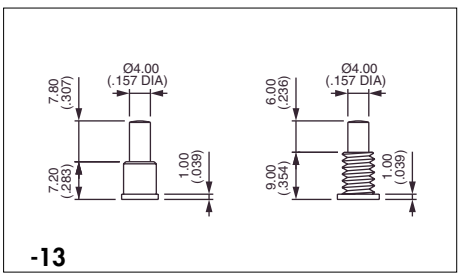

-13

Ø 4 (.157) - standard with threaded bushing

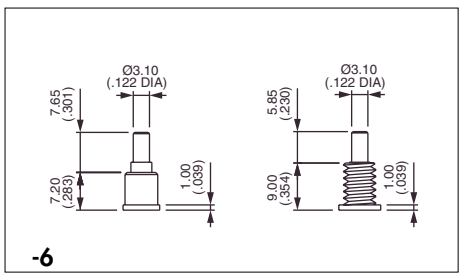

-6

Ø 3,1 (.122)

If plunger not specified, we supply former default option -13.

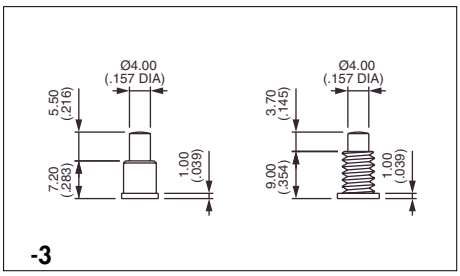

-3

Ø 4 (.157) - standard with plain bushing

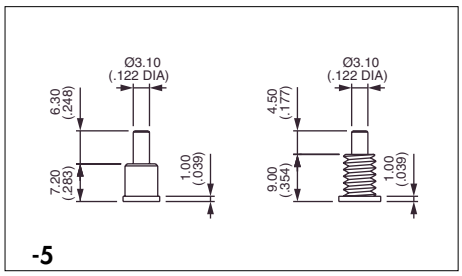

-5

Ø 3,1 (.122)

SPECIAL OPTIONS

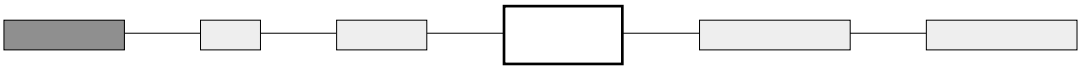

X624 Straight PC terminals - bracket mounting - **with shorter bushing and plunger**



Single pole
18235Y -2X624



ON MOM

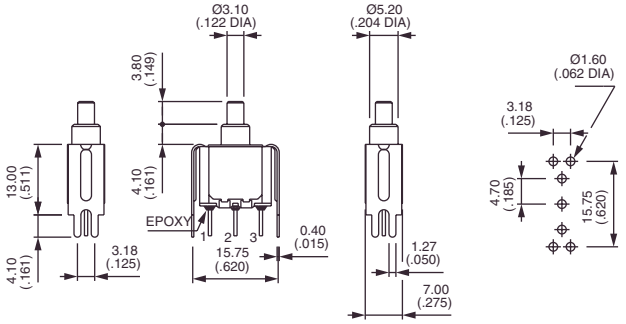

Double pole
18245Y -2X624



ON MOM

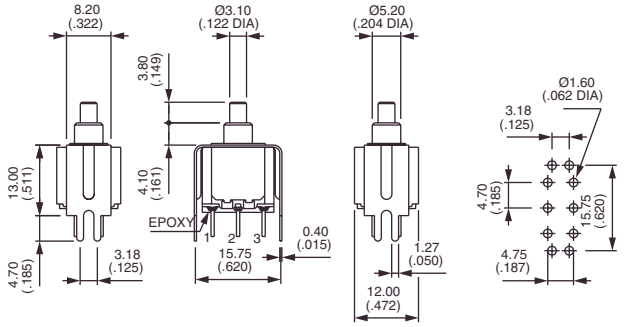

X662 **Snap-in mounting - straight PC terminals**



Single pole
18835 X662



ON MOM

Double pole
18845 X662

ON MOM

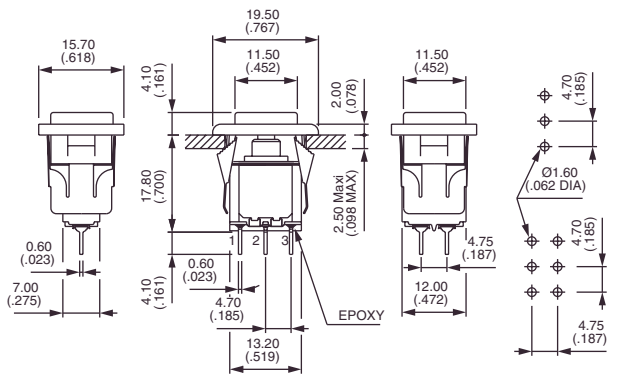

D

SPECIAL OPTIONS (continued)



X371 Plain bushing Ø 6,25 mm (.246) (instead of standard threaded bushing).

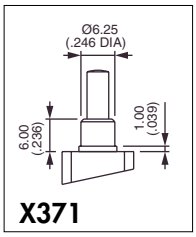

X372 Shorter threaded bushing Ø 6,35 (1/4). **Height 7 mm (.274).**

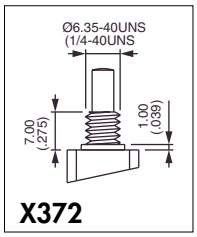

X386 Threaded bushing Ø 6,35 mm (1/4) to replace plain bushing on models W - WW and Y.

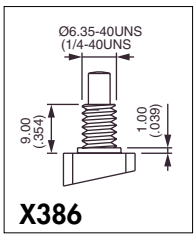

X438 Plain bushing Ø 6,25 mm (.246). **Height 7,2 mm (.283)** - **without shoulder.**

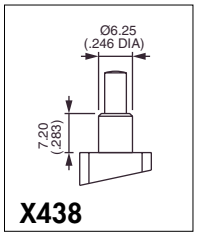

F Tin dipped terminals (for PC terminals only)

CAPS

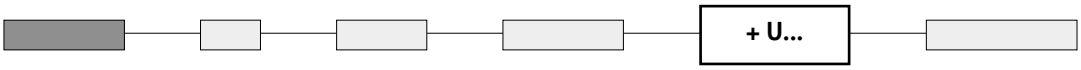

Caps for Ø 4 (.157) plungers (-13, -3)

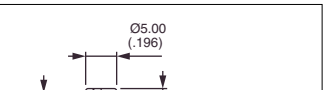

U900



U1140



U1720

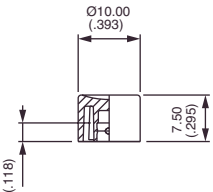

U480

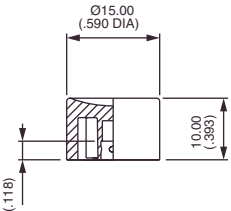

U630

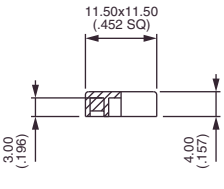

U2430
Square

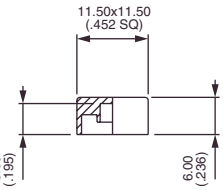

U2020
Square

Cap colours

Replace last "0" by number

1	blue
2	black
3	green
4	grey
5	yellow
6	red
7	ivory
7/1	white
9	orange

Caps for Ø 3,1 (.122) plungers (-5, -6)

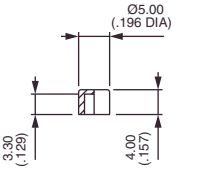

U2400

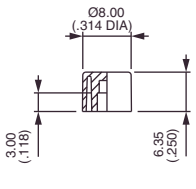

U2510

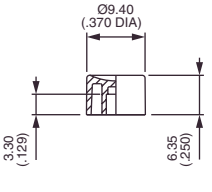

U2130

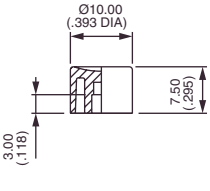

U2900

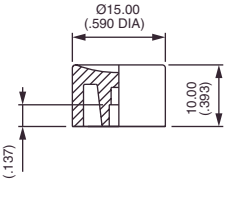

U3400

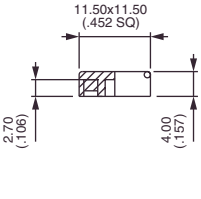

U910
Square

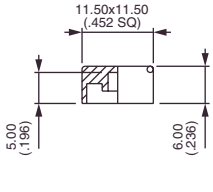

U2340
Square

CAPS (continued)

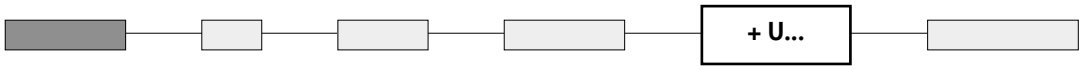

Caps for 18800 and 18800X662 models

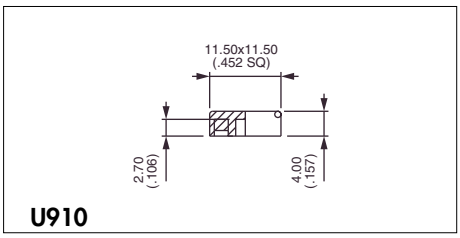

U910
Square

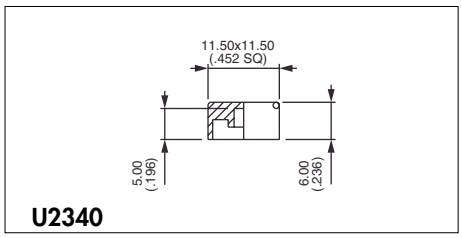

U2340
Square

Cap colours	
Replace "0" by number	
1	blue
2	black
3	green
4	grey
5	yellow
6	red
7	ivory
7/1	white
9	orange

DRESS NUTS

For models with threaded bushing (18500 - 18700 - 18200 - 18900)

Chrome plated

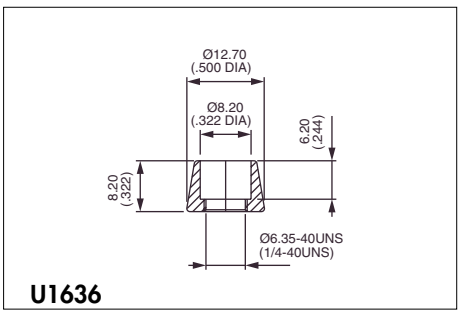

U1636
For caps U1140 and U2510

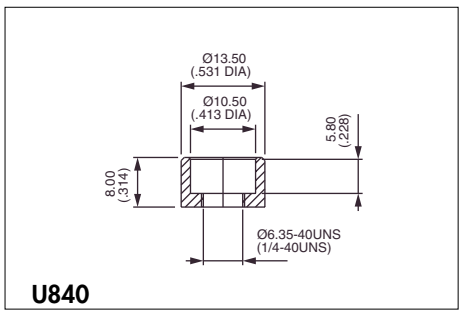

U840
For cap U480 and U2900

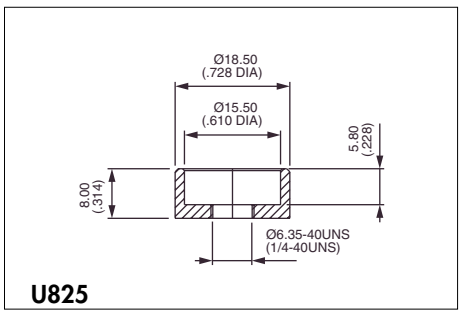

U825
For caps U630 and U3400

Dress nuts are to be ordered separately.

BEZELS



For snap-in models (18800 - 18800X662)

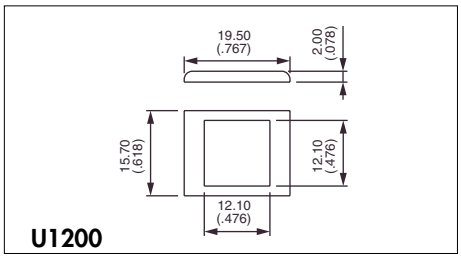

U1200

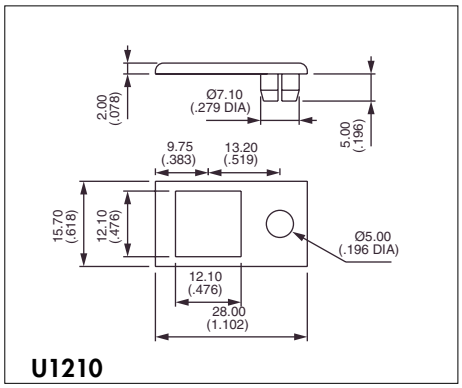

U1210

For LED Ø 5 - not supplied

Bezel colours	
Replace last "0" by number	
1	blue
2	black
3	green
4	grey
5	yellow
6	red
7	ivory
7/1	white
9	orange

For bracket mounting models (18200Y and 18200YX624)

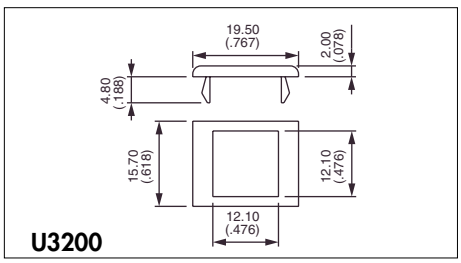

U3200

STANDARD PANEL MOUNTING

Panel thickness with bezel : 1 mm (.039) to 2,5 mm (.098)

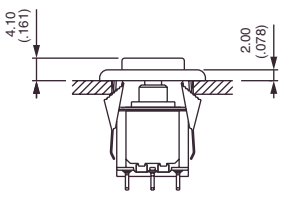

18800 + U910 + U1200

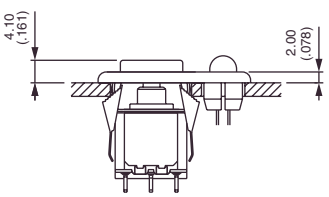

18800 + U910 + U1210

18000 SERIES
SNAP-ACTION MOMENTARY PUSHBUTTON SWITCHES
For high currents

D

ELECTRICAL SPECIFICATIONS

- Max. current/voltage rating with resistive load :
  3A 250VAC - 6A 125VAC - 7A 30VDC
- Initial contact resistance : 20 mΩ max. at 0,1A 3VDC
- Insulation resistance : 200.000 MΩ min. between terminals and frame
- Dielectric strength : 1.500 Vrms 50 Hz min.
- Electrical life : 60.000 cycles at full load

GENERAL SPECIFICATIONS

- Travel : 0,90 mm (.035) approx.
- Operating temperature : -30°C to +85°C

MATERIALS

- Case : diallylphthalate (DAP)
- Actuator : glass filled polyester
- Bushing : brass, nickel plated
- Housing : stainless steel
- Contacts : silver
- Terminal seal : epoxy

18000 SERIES
SNAP-ACTION MOMENTARY PUSHBUTTON SWITCHES
For high currents

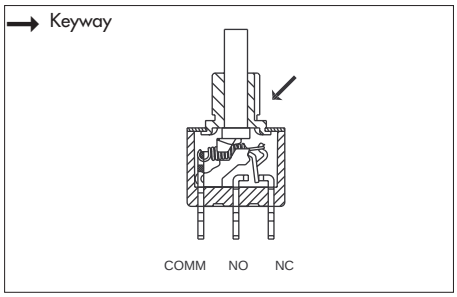

- Threaded bushing Ø 6,35 (1/4)
- Solder lug terminals
- Epoxy sealed terminals

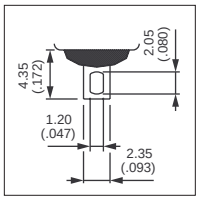

D

MODEL STRUCTURE

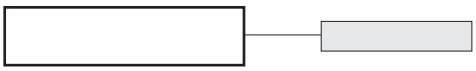

Single pole



18635A



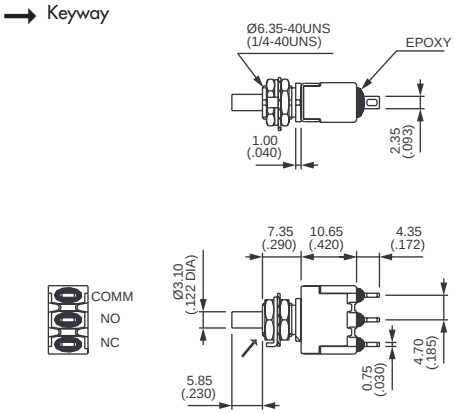

Double pole



18645A



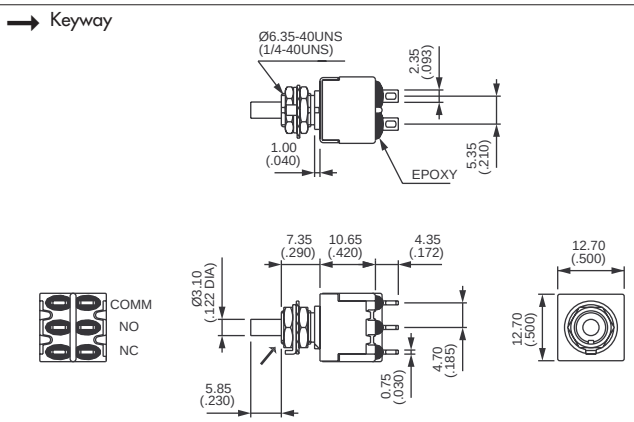

CAPS



Round

U2400	Ø 5 (.196)
U2510	Ø 8 (.314)
U2130	Ø 9,4 (.370)
U2900	Ø 10 (.393)
U3400	Ø 15 (.590)

Square

U910	Height 4 (.157)
U2340	Height 6 (.236)

PANEL CUT-OUT

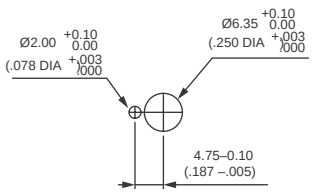

For cap dimensions, see "Caps for Ø 3,1 (.122) plungers" on the preceding pages.