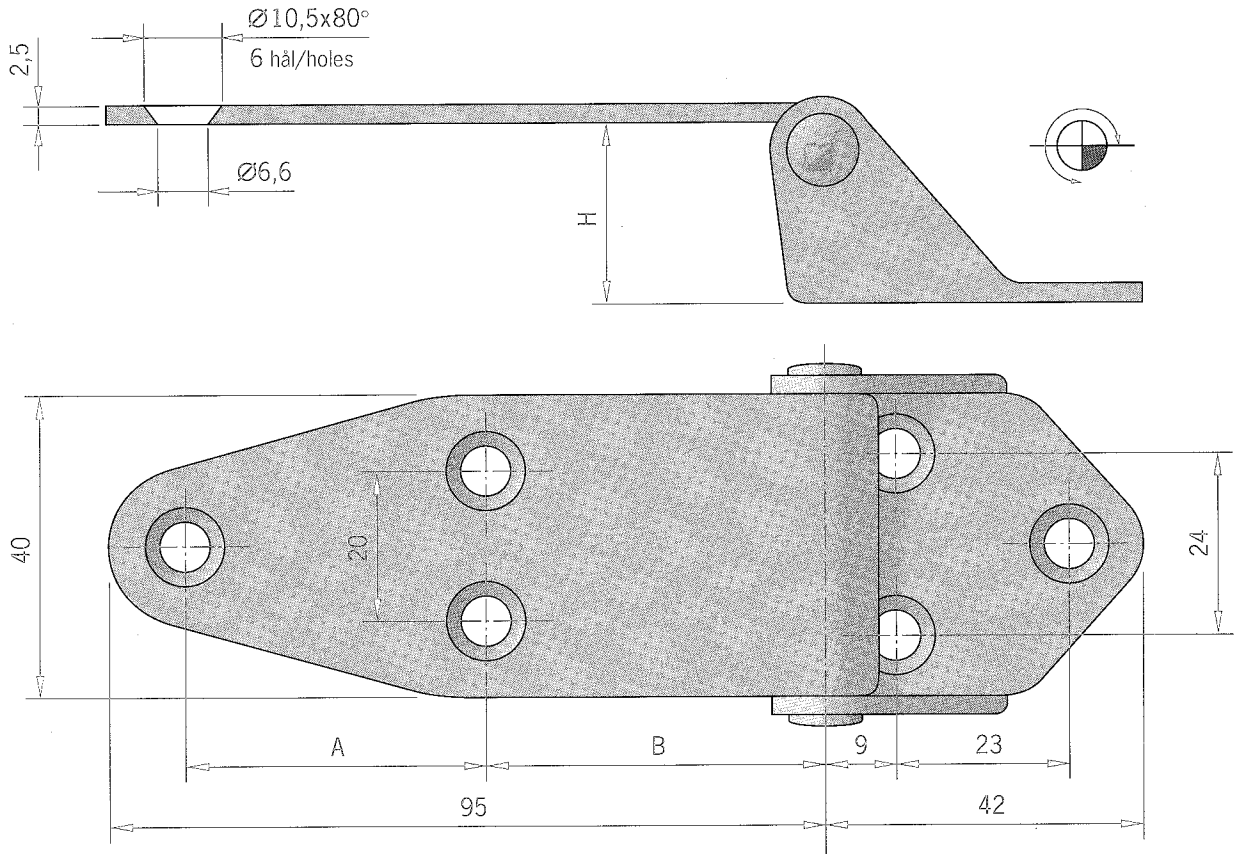

Art no	441732 A=40 B=45 H=24	441733 A=30 B=55 H=34
Material	Rfr. SIS 2333 / S.S. ASTM 304	
Ytbehandling / Treatment	Elektropolerat / Electro polished	
Vikt / Weight	128g/st / 128g/pcs	150g/st / 150g/pcs

7 320394 417325

7 320394 417332

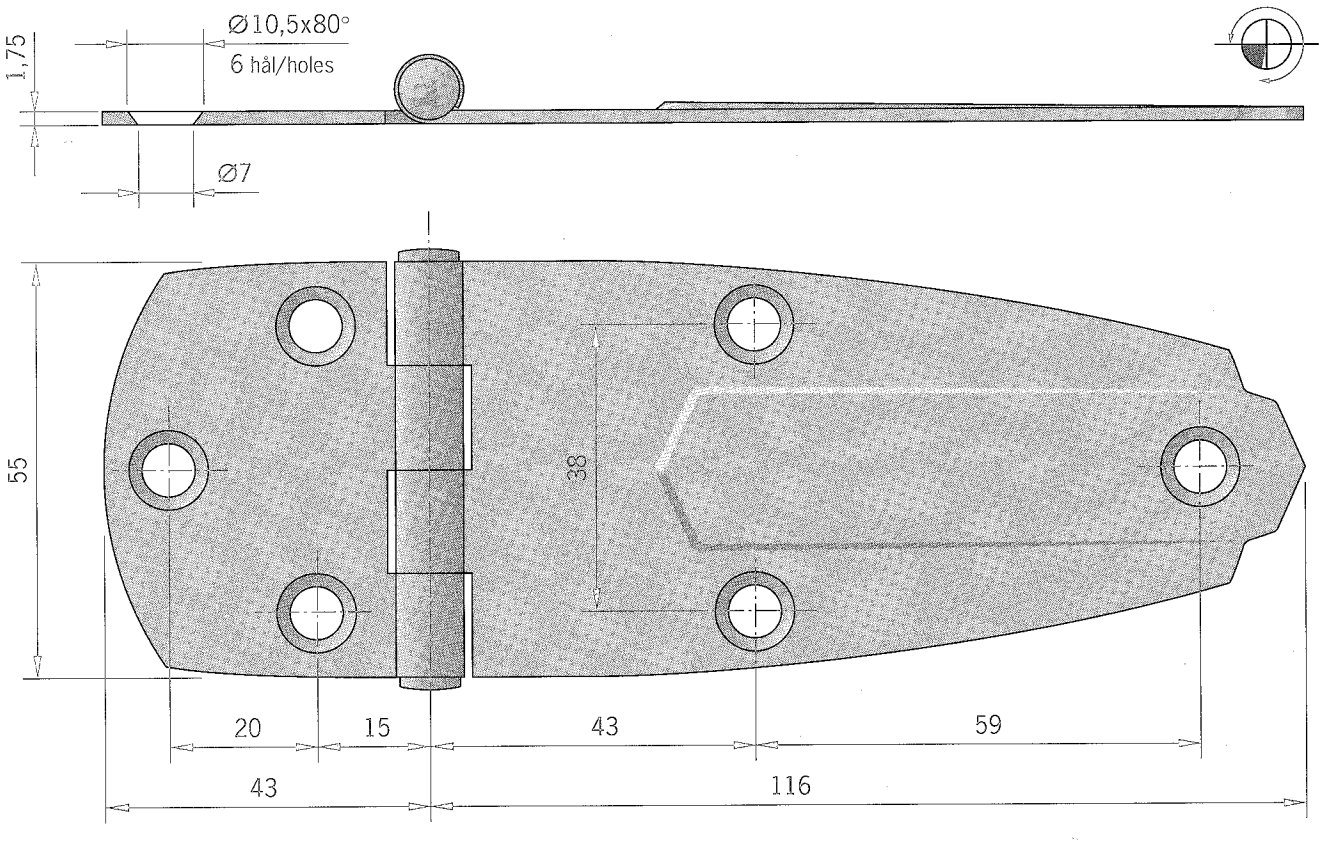

Art no	441680
Material	Rfr. SIS 2333 / S.S. ASTM 304
Ytbehandling / Treatment	Elektropolerat / Electro polished
Vikt / Weight	118g/st / 118g/pcs

7 320394 416809