E40228

Mounting adapter for flow sensors

ADAPT /SM/1/G2 - 2 NPT

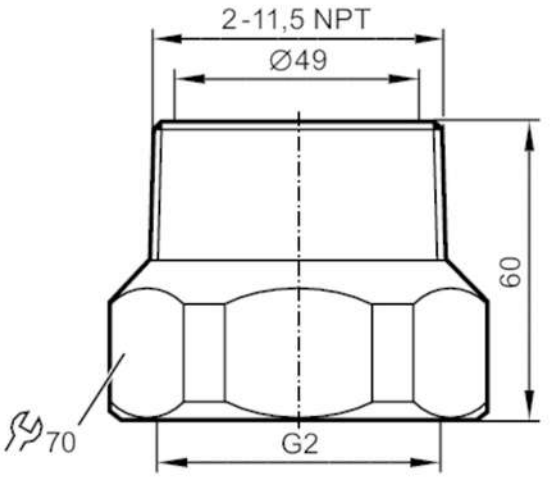

CRN

Application		
Design		for flow sensors Typ SM2, SM9
Pressure rating	[bar]	16
MAWP (for applications according to CRN)	[bar]	16
Tests / approvals		
Pressure Equipment Directive		A possible classification to PED depends on the application and has to be carried out by the user / operator.
Pressure Equipment Directive EAC		The adapter is intended for use in devices, machines and installations that do not fall under the categories of the technical rule TR CU 032/2013.
Safety instructions		The compatibility between medium and product material has to be checked in all applications.
Mechanical data		
Weight	[g]	1446.5
Materials		Adapter: stainless steel (1.4571/316Ti); O-ring: FKM 47,22 x 3,53 mm
Sensor connection		G 2
Process connection		threaded connection 2" NPT
Accessories		
Items supplied		O-rings: 2
Remarks		
Pack quantity		2 pcs.