BF2510A024

THREE-POLE CONTACTOR, IEC OPERATING CURRENT IE (AC3) = 25A, AC COIL 50/60HZ, 24VAC, 1NO AUXILIARY CONTACT



Product designation			Power contactor
Product type designation			BF25
Contact characteristics			
Number of poles		nr.	3
Rated insulation voltage Ui IEC/EN		V	690
Rated impulse withstand voltage Uimp		kV	6
Operational frequency			
	min	Hz	25
	max	Hz	400
Conventional free air thermal current Ith IEC/EN		A	32
Operational current Ie			
	AC-1 (≤40°C)	A	32
	AC-3 (≤440V ≤55°C)	A	25
	AC-4 (400V)	A	10
Rated operational power AC-1 (T≤40°C)			
	230V	kW	12
	400V	kW	21
	500V	kW	26
	690V	kW	36
Rated operational power AC-3 (T≤55°C)			
	230V	kW	7
	400V	kW	12.5
	415V	kW	13.4
	440V	kW	13.4
	500V	kW	15
	690V	kW	11
Short-time allowable current for 10s (IEC/EN60947-1)		A	200
Protection fuse			
	gG (IEC)	A	50
	aM (IEC)	A	25
Making capacity (RMS value)		A	250
Breaking capacity at voltage			
	440V	A	200
	500V	A	184
	690V	A	102
Resistance per pole (average value)		mΩ	2.5
Power dissipation per pole (average value)			
	Power dissipation pole (average value) Ith	W	2.6
	AC3	W	1.6
Tightening torque for terminals			
	min	Nm	1.5
	max	Nm	1.8
	min	lbft	1.1
	max	lbft	1.5
Tightening torque for coil terminal			

The characteristics described in this document are subject to updates or modifications at any time. The descriptions, technical and functional information, illustrations and instructions in this brochure are purely illustrative, and are consequently not contractually binding

		min	Nm	0.8
		max	Nm	1
		min	lbft	0.8
		max	lbft	0.74
Max number of wires simultaneously connectable			nr.	2
Conductor section				
	AWG			
		min		16
		max		10
	Flexible w/o lug conductor section			
		min	mm²	1
		max	mm²	6
	Flexible c/w lug conductor section			
		min	mm²	1
		max	mm²	4
	Flexible with insulated spade lug conductor section			
		min	mm²	1
		max	mm²	4
Power terminal protection according to IEC/EN 60529				IP20 when wired
Auxiliary contact characteristics				
Type of contact				1 NO
Thermal current Ith			A	10
IEC/EN 60947-5-1 designation				A600 - P600
Operational current Ie AC-1 (≤40°C)			A	32
Operating current AC15				
		230V	A	3
		400V	A	1.9
		500V	A	1.4
Operating current DC12				
		110V	A	5.7
Operating current DC13				
		24V	A	5.7
		48V	A	2.9
		60V	A	2.3
		110V	A	Screw / DIN rail 35mm
		125V	A	0.6
		220V	A	0.2
		600V	A	1.2
Ambient conditions				
Temperature				
	Operating temperature			
		min	°C	-50
		max	°C	70
	Storage temperature			
		min	°C	-60
		max	°C	80
Max altitude			m	3000
Operational position				
		Operating position normal		Vertical plan
		Operating position allowable		±30°
Mounting				Screw / DIN rail 35mm
Weight			g	0.36

The characteristics described in this document are subject to updates or modifications at any time. The descriptions, technical and functional information, illustrations and instructions in this brochure are purely illustrative, and are consequently not contractually binding

Operations				
Mechanical life			Cycles	20000000
Electrical life			Cycles	1200000
Safety related data				
Performance level B10d according to EN/ISO 13489-1				
		rated load	Cicli	1200000
		mechanical load	Cicli	20000000
Mirror contats according to IEC/EN 609474-4-1				yes
EMC compatibility				yes
AC coil operating				
AC operating voltage				
	of 50/60Hz coil powered at 50Hz			
		pick-up		
			min	%Us 0.8
			max	%Us 1.1
		drop-out		
			min	%Us 0.2
			max	%Us 0.55
	of 50/60Hz coil powered at 60Hz			
		pick-up		
			min	%Us 0.85
			max	%Us 1.1
		drop-out		
			min	%Us 0.2
			max	%Us 0.55
	of 60Hz coil powered at 60Hz			
		pick-up		
			min	%Us 0.8
			max	%Us 1.1
		drop-out		
			min	%Us 0.2
			max	%Us 0.55
AC operating voltage				
	of 50/60Hz coil powered at 50Hz			
			in-rush	VA 75
			holding	VA 9
	of 50/60Hz coil powered at 60Hz			
			in-rush	VA 70
			holding	VA 6.5
	of 60Hz coil powered at 60Hz			
			in-rush	VA 75
			holding	VA 9
Dissipation at holding ≤20°C 50Hz				W 2.5
Max cycles frequency				
Mechanical operations				Cycles/h 3600
Operating times				
Average time for Us control				
	in AC			
		Closing NO		
			min	ms 8
			max	ms 24
		Opening NO		
			min	ms 10
			max	ms 20

The characteristics described in this document are subject to updates or modifications at any time. The descriptions, technical and functional information, illustrations and instructions in this brochure are purely illustrative, and are consequently not contractually binding

Closing NC			
	min	ms	14
	max	ms	28
Opening NC			
	min	ms	7
	max	ms	18

UL technical data

Full-load current (FLA) for three-phase AC motor			
	at 480V	A	21
	at 600V	A	17
Yielded mechanical performance for			
for single-phase AC motor			
	Yielded mechanical performance at 110/120V	hp	2
	Yielded mechanical performance at 230V	hp	3
for three-phase AC motor			
	Yielded mechanical performance at 200/208V	hp	7.5
	Yielded mechanical performance at 220/230V	hp	7.5
	Yielded mechanical performance at 460/480V	hp	15
	Yielded mechanical performance at 575/600V	hp	15
Contact rating of auxiliary contacts according to UL			A600 - P600
General USE			
Contactor			
	AC current	A	32

Other features

Pollution degree	3

Dimensions

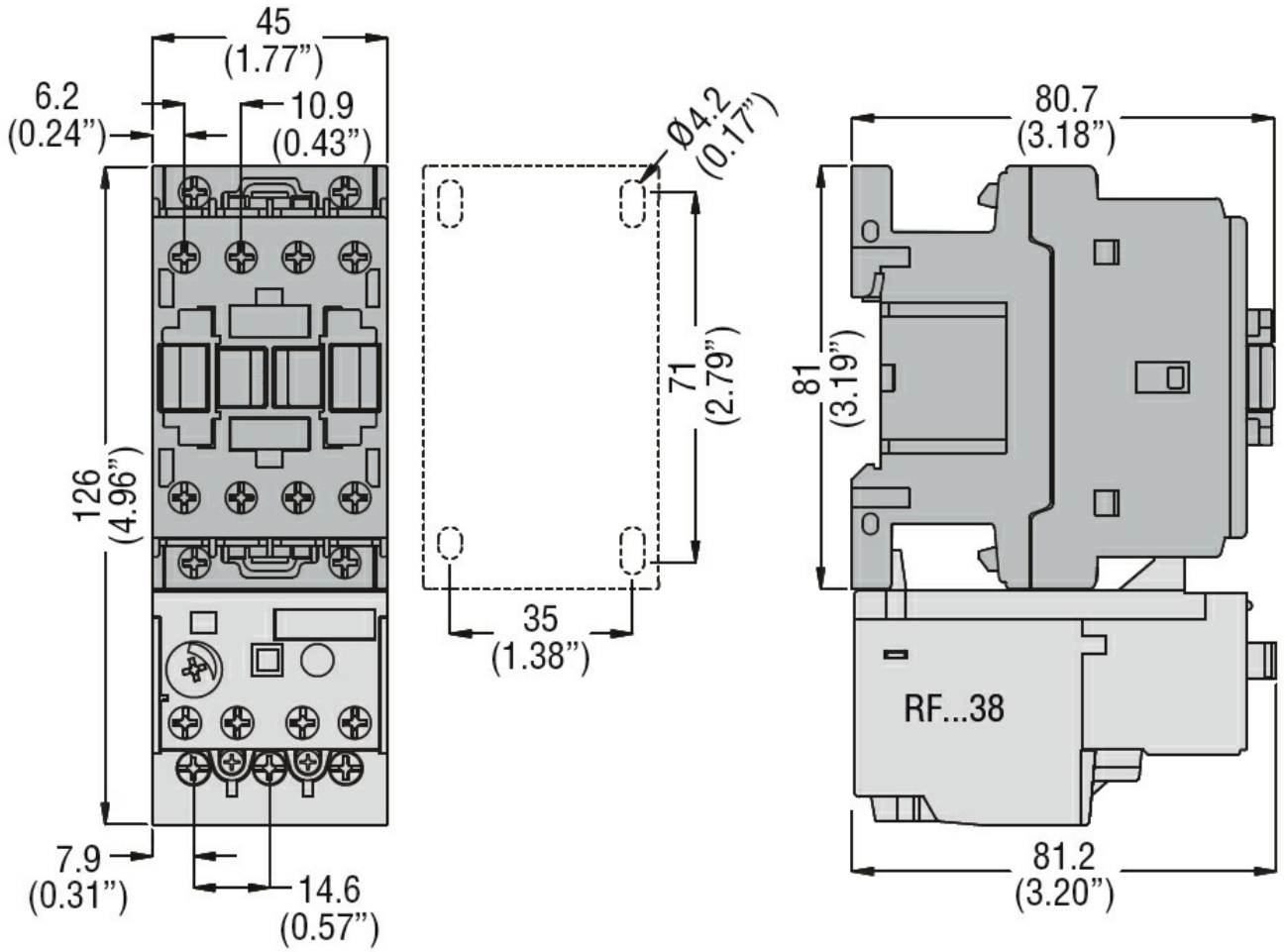

The characteristics described in this document are subject to updates or modifications at any time. The descriptions, technical and functional information, illustrations and instructions in this brochure are purely illustrative, and are consequently not contractually binding

Wiring diagrams

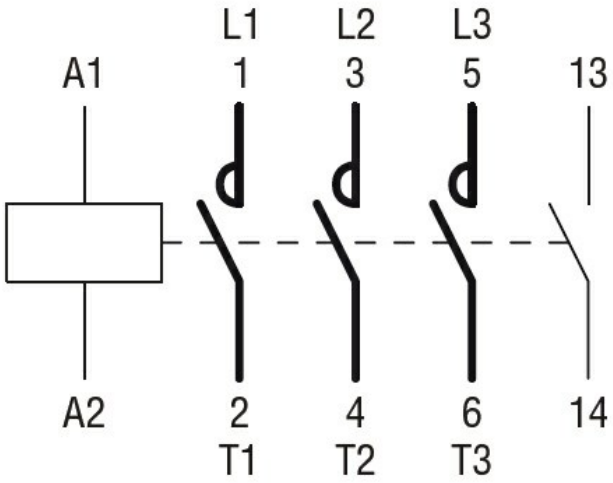

Certifications and compliance

Certifications

CSA C22.2 n° 60947-1
CSA C22.2 n° 60947-4-1
IEC/EN 60947-1
IEC/EN 60947-4-1
UL 60947-1
UL 60947-4-1

Compliance

CCC
cULus
EAC

ETIM 6 classification

EC000066 - Power contactor, AC switching

The characteristics described in this document are subject to updates or modifications at any time. The descriptions, technical and functional information, illustrations and instructions in this brochure are purely illustrative, and are consequently not contractually binding