X67AO1323

1 General information

The module is equipped with 4 inputs with 12-bit digital converter resolution. The output signal range is 0 to 20 mA.

- 4 analog outputs 0 to 20 mA
- Integrated enable relay for initial phase
- Very short cycle times
- Optimal shield grounding on all channels

2 Order data

Model number	Short description	Figure
	Analog output modules	
X67AO1323	X67 analog output module, 4 outputs, 0 to 20 mA, 12-bit converter resolution	

Table 1: X67AO1323 - Order data

Required accessories
For a general overview, see section "Accessories - General overview" of the X67 system user's manual.

3 Technical data

Model number	X67AO1323
Short description	
I/O module	4 analog outputs, 0 to 20 mA
General information	
B&R ID code	0x16F4
Status indicators	I/O function for each channel, supply voltage, bus function
Diagnostics	
I/O power supply	Yes, using status LED and software
Connection type	
X2X Link	M12, B-keyed
Outputs	4x M12, A-keyed
I/O power supply	M8, 4-pin
Power consumption	
Internal I/O	4.5 W
X2X Link power supply	0.75 W
Certifications	
CE	Yes
KC	Yes
EAC	Yes
UL	cULus E115267 Industrial control equipment
HazLoc	cCSAus 244665 Process control equipment for hazardous locations Class I, Division 2, Groups ABCD, T5
ATEX	Zone 2, II 3G Ex nA IIA T5 Gc IP67, Ta = 0 - Max. 60°C TÜV 05 ATEX 7201X
I/O power supply	
Nominal voltage	24 VDC
Voltage range	18 to 30 VDC
Integrated protection	Reverse polarity protection
Power consumption	
Actuator power supply	Max. 12 W [1)]
Analog outputs	
Output	0 to 20 mA
Digital converter resolution	12-bit
Conversion time	400 µs for all outputs
Settling time for output changes over entire range	Approx. 1 ms
Switch on/off behavior	Internal enable relay for booting and errors
Output protection	Protection against wiring with supply voltage, short circuit protection
Output format	Example: INT 0x0000 - 0x7FFF / 1 LSB = 0x0008 = 4.883 µA
Load per channel	Max. load is 400 Ω
Output filter	Example: 1st-order low pass / cutoff frequency 1.5 kHz
Max. gain drift	0.015% / °C [2)]
Max. offset drift	0.032% / °C [3)]
Error caused by load change	Max. 0.5%, from 1 Ω → 400 Ω, resistive
Nonlinearity	<0.1% [3)]
Isolation voltage between channel and bus	500 V_{eff}
Output response when power supply is switched on/off	An enable relay is switched on at a defined value ≠ 0, default setting = 10 kΩ to GND
Short-circuit proof	
Current limiting	±40 mA
To GND	Yes
To sensor or I/O power supply	Yes
Max. error at 25°C and 50 Ω load	
Gain	0.2% [2)]
Offset	0.05% [3)]
Actuator power supply	
Voltage	I/O power supply minus voltage drop for short circuit protection
Voltage drop for short-circuit protection at 500 mA	Max. 2 VDC
Summation current	Max. 0.5 A
Short-circuit proof	Yes
Electrical properties	
Electrical isolation	Channel isolated from bus Channel not isolated from channel
Operating conditions	
Mounting orientation	
Any	Yes
Installation elevation above sea level	
0 to 2000 m	No limitations
>2000 m	Reduction of ambient temperature by 0.5°C per 100 m

Table 2: X67AO1323 - Technical data

Model number	X67AO1323
Degree of protection per EN 60529	IP67
Ambient conditions	
Temperature	
Operation	-25 to 60°C
Derating	-
Storage	-40 to 85°C
Transport	-40 to 85°C
Mechanical properties	
Dimensions	
Width	53 mm
Height	85 mm
Depth	42 mm
Weight	190 g
Torque for connections	
M8	Max. 0.4 Nm
M12	Max. 0.6 Nm

Table 2: X67AO1323 - Technical data

1) The power consumption of the sensors connected to the module is not permitted to exceed 12 W.
2) Based on the current output value.
3) Based on the entire output range.

4 LED status indicators

Figure	LED	Color/Status		Description
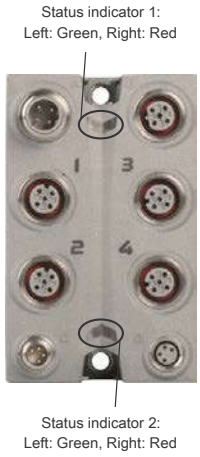	**Status indicator 1:** Status indicator for X2X Link			
	Left/Right	**Green (left)**	**Red (right)**	**Description**
		Off	Off	No supply via X2X Link
		On	Off	X2X Link supplied, communication OK
		Off	On	X2X Link supplied, but X2X Link communication is not functioning
		On	On	PREOPERATIONAL: X2X Link supplied, module not initialized
	I/O LEDs: Status indicator for the corresponding analog output			
	1 - 4	**Color**	**Status**	**Description**
		Orange	On	Lights as soon as the enable relay is activated (i.e. a value ≠ 0 is output)
			Off	The enable relay has not yet been activated (no value ≠ 0 has been output yet).
	Status indicator 2: Status indicator for module function			
	Left	**Color**	**Status**	**Description**
		Green	Off	No power to module
			Single flash	RESET mode
			Blinking	PREOPERATIONAL mode
			On	RUN mode
	Right	**Color**	**Status**	**Description**
		Red	Off	No power to module or everything OK
			On	Error or reset status
			Double flash	Supply voltage not in the valid range

5 Connection elements

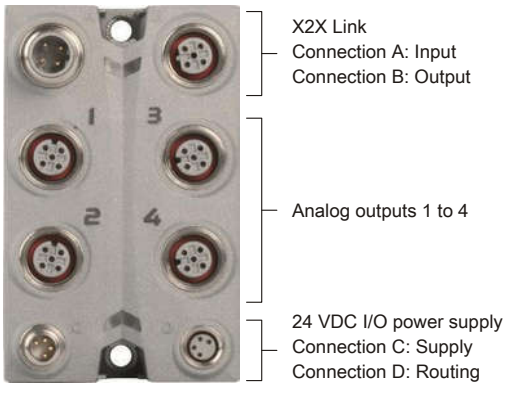

6 X2X Link

This module is connected to X2X Link using pre-assembled cables. The connection is made using M12 circular connectors.

Connection	Pinout	
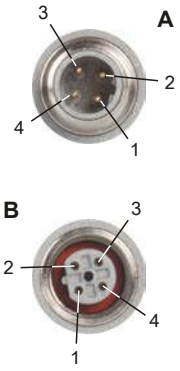	**Pin**	**Description**
	1	X2X+
	2	X2X
	3	X2X⊥
	4	X2X\
	Shield connection made via threaded insert in the module. A → B-keyed (male), input B → B-keyed (female), output	

7 24 VDC I/O power supply

The I/O power supply is connected via M8 connectors C and D. The I/O power supply is connected via connector C (male). Connector D (female) is used to route the I/O power supply to other modules.

Information:

The maximum permissible current for the I/O power supply is 8 A (4 A per connection pin)!

Connection	Pinout	
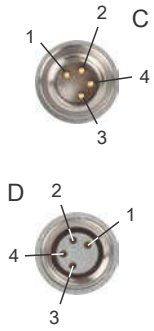	**Pin**	**Description**
	1	24 VDC
	2	24 VDC
	3	GND
	4	GND
	C → Connector (male) in module, feed for I/O power supply D → Connection (female) in module, routing of I/O power supply	

8 Pinout

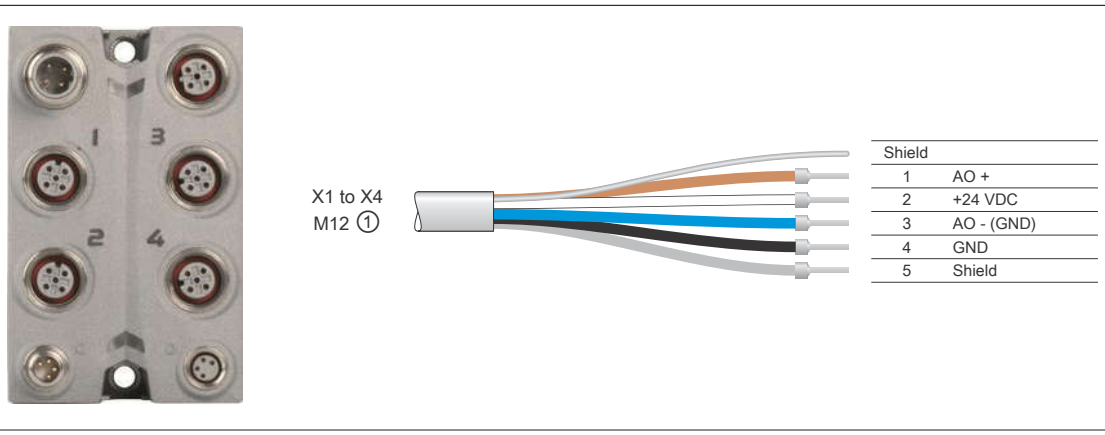

① X67CA0A41.xxxx: M12 sensor cable, straight
X67CA0A51.xxxx: M12 sensor cable, angled

8.1 Connections X1 to X4

M12, 5-pin	Pinout	
Connections 1/2	**Pin**	**Name**
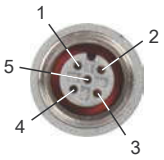	1	Output +
	2	24 VDC actuator supply
	3	Output - (GND)
	4	GND
	5	Shield[1)]
	1) Shielding also provided by threaded insert in the module. X1 to X4 → A-keyed (female), output	
Connections 3/4		

9 Connection example

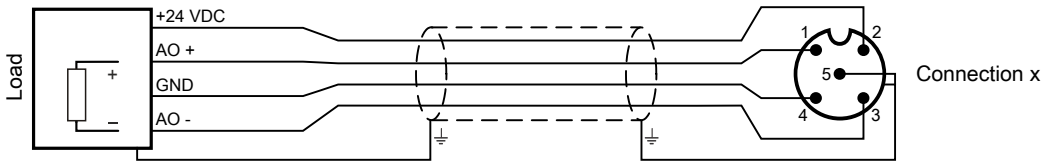

10 Analog output - Output circuit diagram

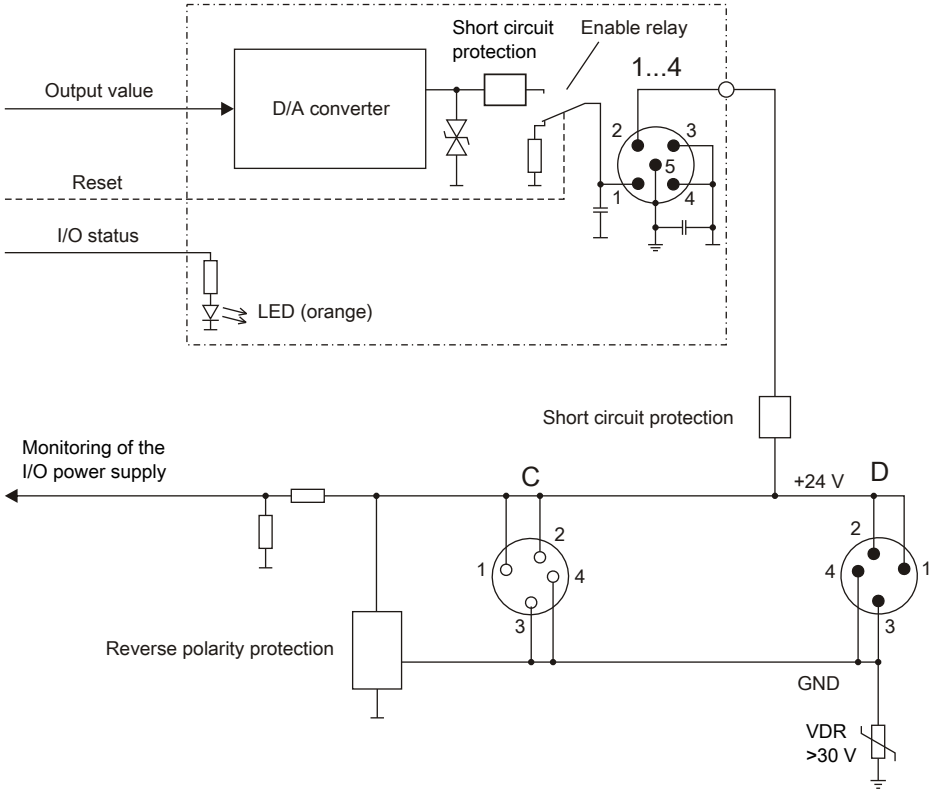

11 Register description

11.1 General data points

In addition to the registers listed in the register description, the module also has other more general data points. These registers are not specific to the module but contain general information such as serial number and hardware version.

These general data points are listed in section "Additional information - General data points" of the X67 system user's manual.

11.2 Function model 0 - Standard and function model 1 - I/O with fast reaction

Register	Name	Data type	Read		Write	
			Cyclic	Acyclic	Cyclic	Acyclic
Communication						
0	AnalogOutput01	INT			•	
2	AnalogOutput02	INT			•	
4	AnalogOutput03	INT			•	
6	AnalogOutput04	INT			•	
8192	asy_ModulID	UINT		•		
8196	asy_SupplyStatus	USINT		•		
8208	asy_SupplyInput	USINT		•		

11.3 Function model 254 - Bus controller

Register	Offset[1)]	Name	Data type	Read		Write	
				Cyclic	Acyclic	Cyclic	Acyclic
Communication							
0	0	AnalogOutput01	INT			•	
2	2	AnalogOutput02	INT			•	
4	4	AnalogOutput03	INT			•	
6	6	AnalogOutput04	INT			•	
8192	-	asy_ModulID	UINT		•		
8196	-	asy_SupplyStatus	USINT		•		
8208	-	asy_SupplyInput	USINT		•		

1) The offset specifies the position of the register within the CAN object.

11.3.1 Using the module on the bus controller

Function model 254 "Bus controller" is used by default only by non-configurable bus controllers. All other bus controllers can use additional registers and functions depending on the fieldbus used.

For detailed information, see section "Additional information - Using I/O modules on the bus controller" of the X67 user's manual (version 3.30 or later).

11.3.2 CAN I/O bus controller

The module occupies 1 analog logical slot on CAN I/O.

11.4 Function model comparison

Function model 0: I/O without jitter (standard)

Corrected values are output in the next cycle if the minimum cycle is ≥400 µs in order to reduce jitter to a minimum.

Function model 1: I/O with fast reaction

Corrected values are output in the same cycle if the minimum cycle is ≥400 µs (optimized reactions).

Comparison of the two function models

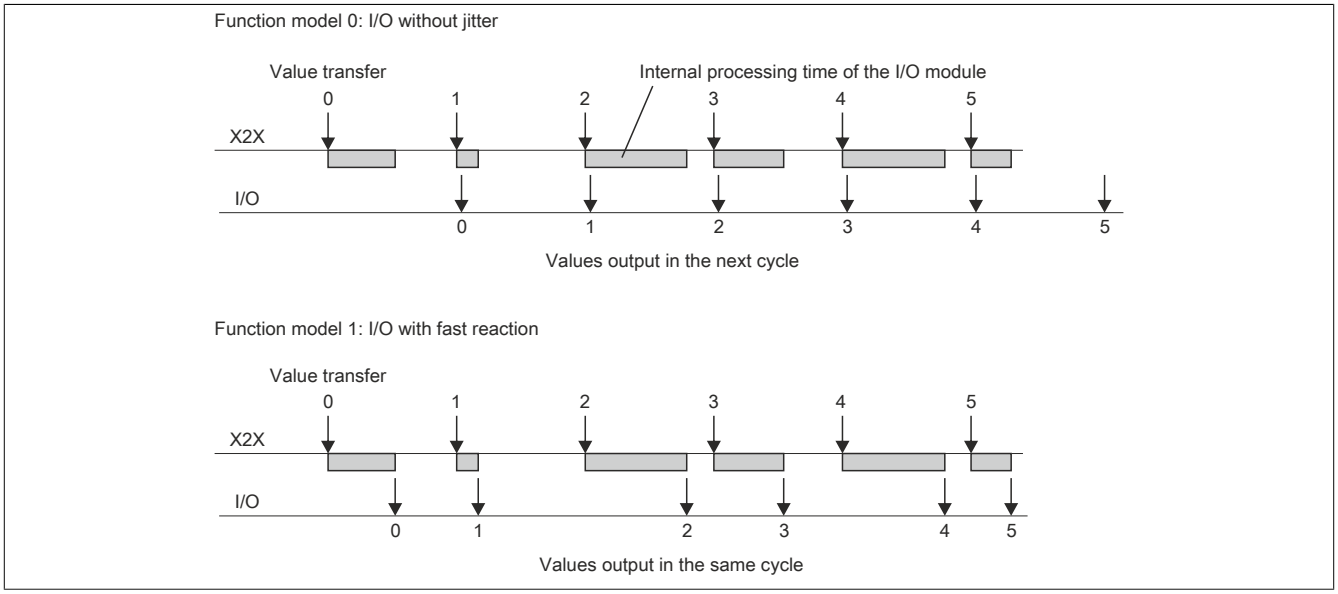

11.5 Analog signal - Communication

11.5.1 Analog outputs

Corrected values are output in the next cycle if the minimum cycle is ≥400 µs.

11.5.1.1 Output values of the analog outputs

Name:
AnalogOutput01 to AnalogOutput04

This register is used to indicate the analog output value mode.

Data type	Value	Output signal:
INT	0 to 32767	Current signal 0 to 20 mA

11.5.2 Reading the module ID

Name:
asy_ModulID

This register offers the possibility to read the module ID.

Data type	Values
UINT	Module ID

11.5.3 Operating limit status registers

Name:
asy_SupplyStatus

This register can be used to read the status of the operating limits.

Data type	Values
USINT	See bit structure.

Bit structure:

Bit	Description	Value	Information
0	I/O power supply within/outside warning limits	0	Within the warning limits (18 to 30 V)
		1	Outside of the warning limits (<18 V or >30 V)
1 - 7	Reserved	0	

11.5.4 I/O supply voltage

Name:
asy_SupplyInput

This register contains the I/O supply voltage measured by the module.

Data type	Values	Information
USINT	0 to 255	Resolution 1 V

11.6 Minimum cycle time

The minimum cycle time specifies the time up to which the bus cycle can be reduced without communication errors occurring. It is important to note that very fast cycles reduce the idle time available for handling monitoring, diagnostics and acyclic commands.

Minimum cycle time
250 µs

11.7 Minimum I/O update time

The minimum I/O update time defines how far the bus cycle can be reduced while still allowing an I/O update to take place in each cycle.

Minimum I/O update time
400 µs