E61440

Draw-wire mechanism for encoders

DRAW WIRE 2400

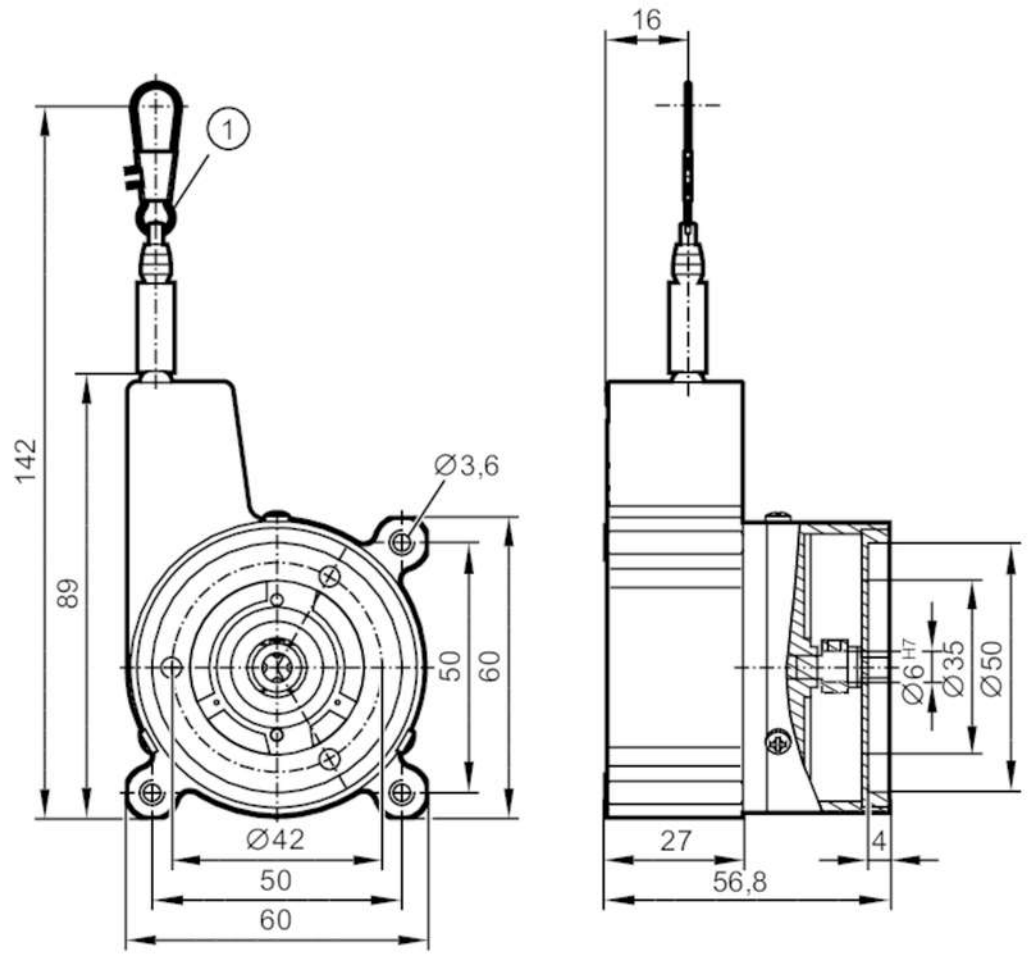

1 snap hook

Product characteristics			
Shaft design		solid shaft	
Shaft diameter	[mm]	6	
Application			
Design		for encoders with 58 mm synchro flange and 6 mm solid shaft	
Accuracy / deviations			
Accuracy		± 0.1 % FSO	
Repeatability		± 0,04 % FSO	
Operating conditions			
Ambient temperature	[°C]	-20...80	
Storage temperature	[°C]	-20...80	
Storage humidity	[%]	5...95; (non condensing)	
Tests / approvals			
Shock resistance		IEC628-2-27	50 g / 5 ms
Vibration resistance		IEC68-2-6	20 g / 20..200 Hz
Mechanical data			
Weight	[g]	598.5	
Top flange diameter	[mm]	58	

E61440

Draw-wire mechanism for encoders

DRAW WIRE 2400

Materials			housing: PA; wire: stainless steel polyamide coated	
Shaft design			solid shaft	
Shaft diameter	[mm]		6	
Max. measuring length	[mm]		2400	
Wire drum circumference	[mm]		150.8	
Wire diameter	[mm]		0.45	
Wire connection			snap hook	
Wire properties		max. speed of wire displacement	[m /s]	1
		max. wire acceleration	[g]	5
		max. extension force	[N]	7
		min. retraction force	[N]	1
Fixing flange			synchro-flange	

Remarks

Pack quantity			1 pcs.	

Diagrams and graphs

Installation instruction

