O8E203

Through-beam sensor receiver

O8E-DNKG/0,30M/AS/3P

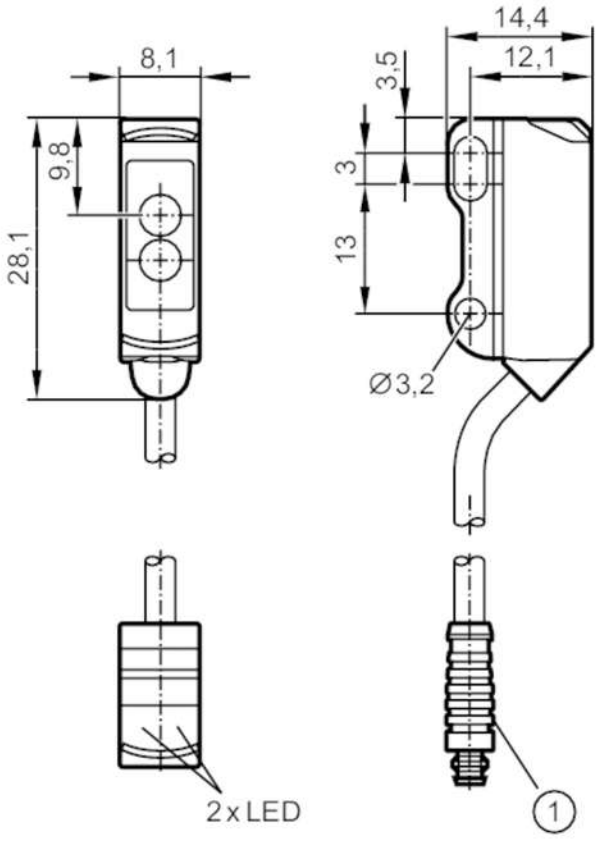

1 receiver in upper lens
illustration (example)

Product characteristics		
Type of light		red light
Housing		rectangular
Application		
Function principle		Through-beam sensor
Electrical data		
Operating voltage	[V]	10...30 DC
Current consumption	[mA]	15; ((24 V))
Protection class		III
Reverse polarity protection		yes
Type of light		red light
Wave length	[nm]	633
Outputs		
Electrical design		NPN
Output function		dark-on mode
Max. voltage drop switching output DC	[V]	2.5

O8E203

Through-beam sensor receiver

O8E-DNKG/0,30M/AS/3P

Permanent current rating of switching output DC	[mA]	100	
Switching frequency DC	[Hz]	1000	
Short-circuit protection		yes	
Type of short-circuit protection		pulsed	
Detection zone			
Transmitter / receiver		receiver	
Range	[m]	< 3	
Operating conditions			
Ambient temperature	[°C]	-25...60	
Protection		IP 65; IP 67	
Tests / approvals			
EMC		EN 60947-5-2	
MTTF	[years]	1152	
UL approval		Ta	-25...60 °C
		Enclosure type	Type 1
		power supply	Limited Voltage/Current
		UL Approval no.	E015
		File number UL	E174191
Mechanical data			
Weight	[g]	23.5	
Housing		rectangular	
Dimensions	[mm]	28.1 x 8.1 x 14.4	
Materials		housing: ABS; stainless steel (316L/1.4404)	
Lens material		PMMA	
Lens alignment		side lens	
Displays / operating elements			
Display		switching status	1 x LED, yellow
		operation	1 x LED, green
Remarks			
Pack quantity		1 pcs.	

Electrical connection

Cable: 0.3 m, PVC, black, Ø 2.9 mm; 3 x 0.08 mm²

Connector: 1 x M8; coding: A



O8E203

Through-beam sensor receiver

O8E-DNKG/0,30M/AS/3P

Connection

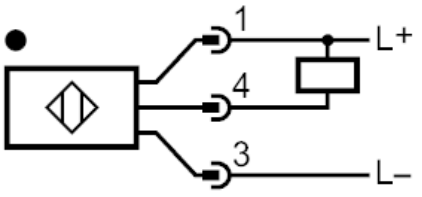

Diagrams and graphs

excess gain graph

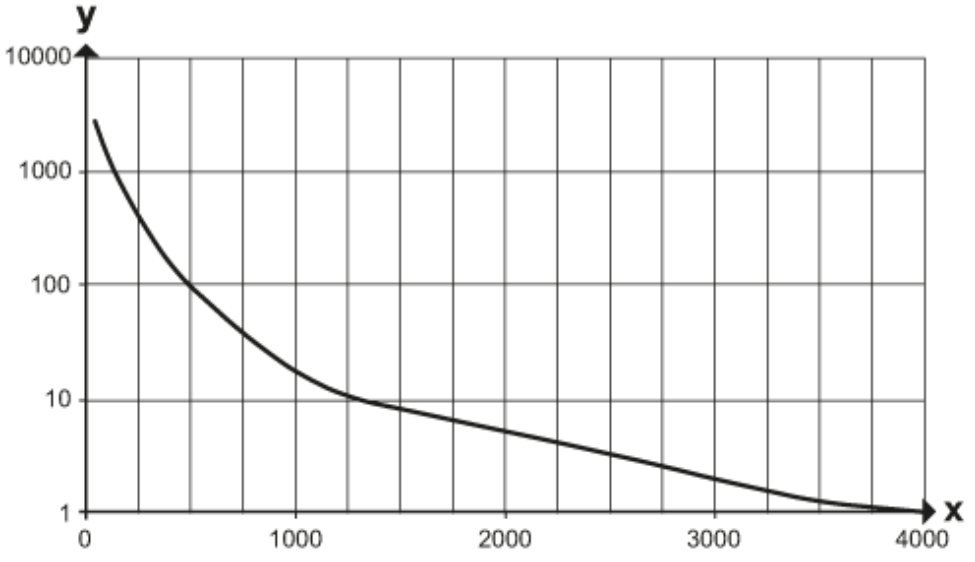

x: distance [mm]

y: excess gain factor