COOPER COILTRONICS®

COOPER Bussmann

CCFL TRANSFORMERS
Cold Cathode Fluorescent Lamp Inverter Transformers

RoHS 2002/95/EC

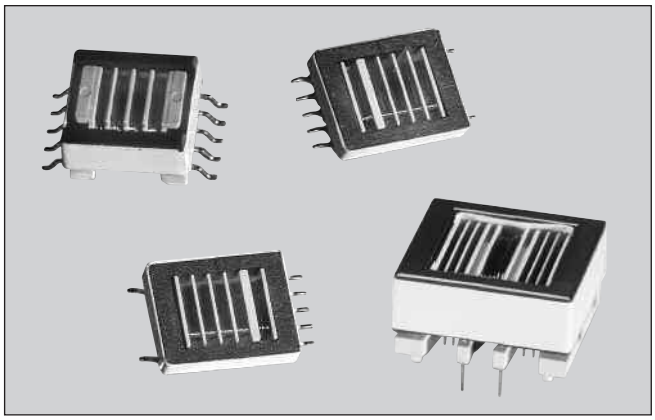

Description

- Transformers for use in CCFL power supplies, available in through-hole and surface mount recess or gull wing versions, incorporating floating or fixed secondary technology
- Supply output current up to 30 milli-Amps
- Frequency range from 40 to 80 KHz
- Deliver output power from 2.5 to 14 Watts
- Operate in royer and other topologies
- Ferrite core material

Applications

- CCFL power supplies

Environmental Data

- Storage temperature range: -40°C to +85°C
- Operating ambient temperature range: 0°C to +70°C
- Solder reflow temperature: +260°C max. for 10 seconds max.

Packaging

- Supplied in bulk packaging

Part Number	Schematic Diagram	Pout Watts	Lp µH[1]	DCRp Ohms Max	DCRs Ohms Max	TR Ns/Np	Vpri Volts Max[2]	Vsec Volts Max[2]	Is Max A rms	Vpri Abnormal[3]	Vsec Abnormal[3]	Mechanical Dimensions	PCB Pad Layout
2.5 WATT VERSIONS													
CTX110652-R	A	2.5	43	0.220	285	67	20	1340	.005	30	2000	A	A
CTX110655-R	B	2.5	43	0.220	285	67	20	1340	.005	30	2000	A	A
CTX110657-R	B	2.5	26	0.212	285	86	15	1340	.005	23	2000	A	A
CTX110659-R	B	2.5	19	0.190	285	100	13	1340	.005	23	2000	A	A
CTX210652-R	A	2.5	43	0.220	285	67	20	1340	.005	30	2000	B	B
CTX210655-R	B	2.5	43	0.220	285	67	20	1340	.005	30	2000	B	B
CTX210657-R	B	2.5	26	0.212	285	86	15	1340	.005	23	2000	B	B
CTX210659-R	B	2.5	19	0.190	285	100	13	1340	.005	23	2000	B	B
4 WATT VERSIONS													
CTX210403-R	C	4	44	0.220	165	50	26	1340	.007	40	2000	C	C
CTX210407-R	C	4	27	0.160	220	86	15	1340	.007	23	2000	C	C
CTX210409-R	C	4	20	0.160	220	100	13	1340	.007	23	2000	C	C
CTX210411-R	C	4	20	0.160	330	125	10	1340	.007	16	2000	C	C
CTX310403-R	C	4	44	0.220	165	50	26	1340	.007	40	2000	D	D
CTX310407-R	C	4	27	0.160	220	86	15	1340	.007	23	2000	D	D
CTX310409-R	C	4	20	0.160	220	100	13	1340	.007	23	2000	D	D
CTX310411-R	C	4	20	0.160	330	125	10	1340	.007	16	2000	D	D
6 WATT VERSIONS													
CTX110600-R	D	6	44	0.160	176	67	20	1340	.011	30	2000	E	E
CTX110603-R	C	6	44	0.160	132	50	26	1340	.011	40	2000	E	E
CTX110605-R	C	6	44	0.160	176	67	20	1340	.011	30	2000	E	E
CTX110607-R	C	6	27	0.132	176	86	15	1340	.011	23	2000	E	E
CTX110609-R	C	6	20	0.132	176	100	13	1340	.011	23	2000	E	E
CTX110611-R	C	6	20	0.132	291	125	11	1340	.011	16	2000	E	E
CTX210600-R	D	6	44	0.160	176	67	20	1340	.011	30	2000	F	C
CTX210603-R	C	6	44	0.160	132	50	26	1340	.011	40	2000	F	C
CTX210605-R	C	6	44	0.160	176	67	20	1340	.011	30	2000	F	C
CTX210607-R	C	6	27	0.132	176	86	15	1340	.011	23	2000	F	C
CTX210609-R	C	6	20	0.132	176	100	13	1340	.011	23	2000	F	C
CTX210611-R	C	6	20	0.132	291	125	11	1340	.011	16	2000	F	C
14 Watt Versions													
CTX410805-R	E	14	24	0.030	262	67	20	1340	.030	30	2000	G	F
CTX410807-R	E	14	16	0.024	272	86	15	1340	.030	23	2000	G	F
CTX410809-R	E	14	16	0.024	314	100	13	1340	.030	23	2000	G	F

[1]Inductances are nominal values [2]Continuous RMS Voltage [3]Maximum Instantaneous RMS Voltage

Mechanical Diagrams

2.5 Watt Versions

Mechanical A

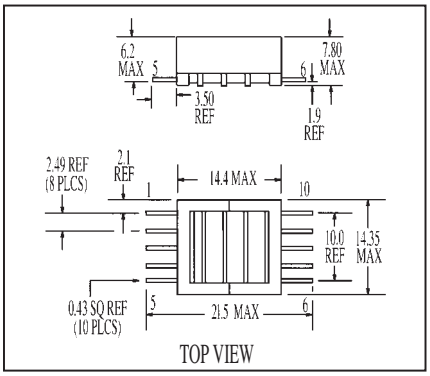

Mechanical B

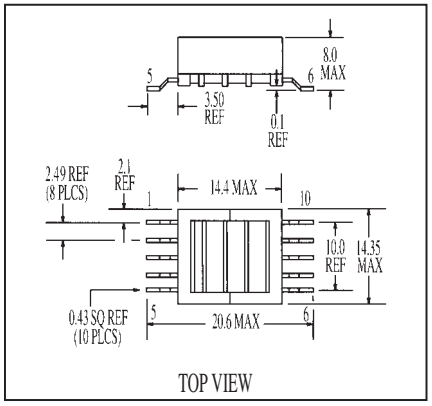

Pad Layout A

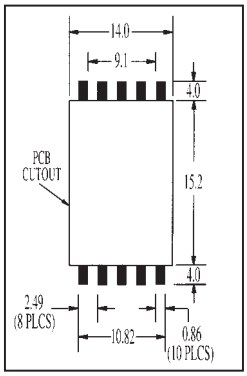

Pad Layout B

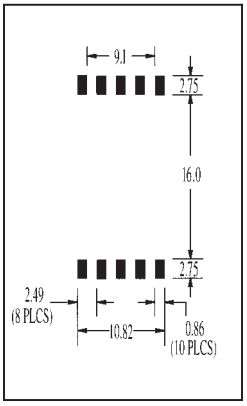

Schematic A

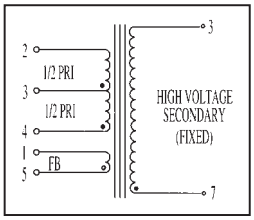

Schematic B

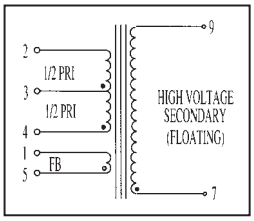

Dimensions are in millimeters

4 Watt Versions

Mechanical C

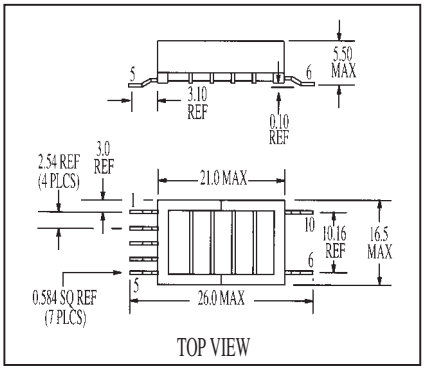

Mechanical D

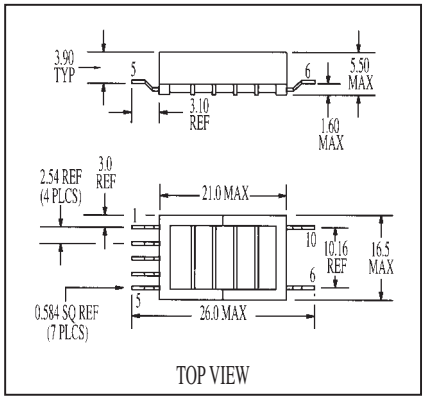

Pad Layout C

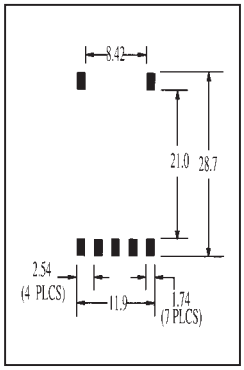

Pad Layout D

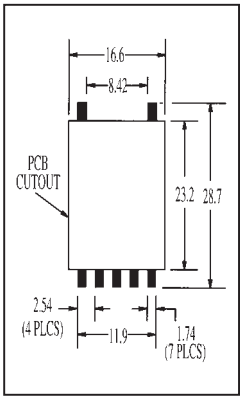

Schematic C

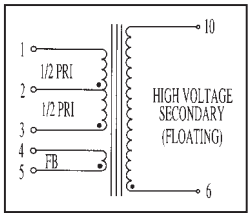

Dimensions are in millimeters

Mechanical Diagrams

6 Watt Versions

Mechanical E

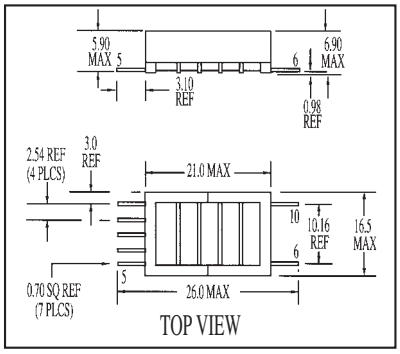

Mechanical F

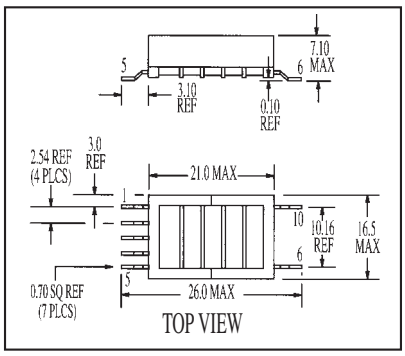

Pad Layout E

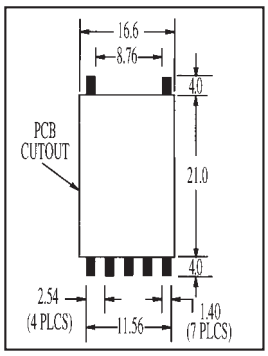

Pad Layout C

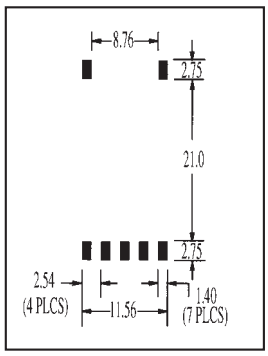

Schematic D

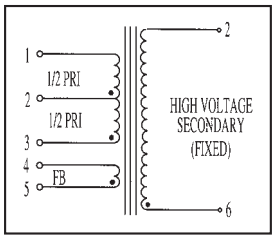

Schematic C

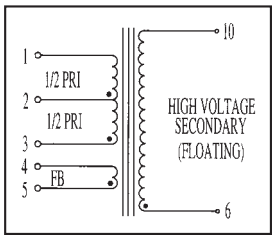

Dimensions are in millimeters

14 Watt Versions

Schematic E

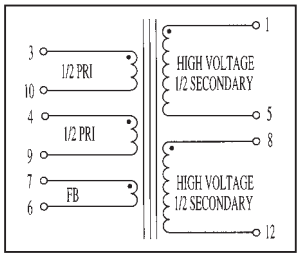

Mechanical G

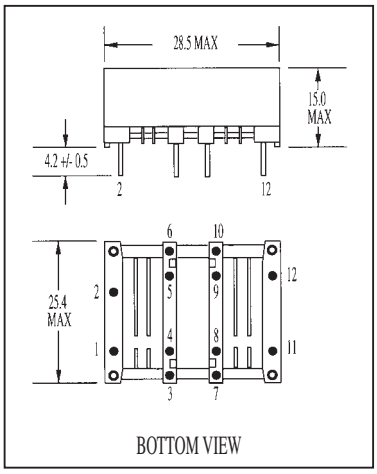

Pad Layout F

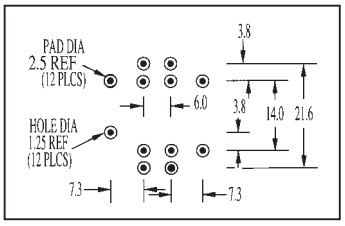

Dimensions are in millimeters

COOPER Bussmann

PM-4303 3/07

© Cooper Electronic Technologies 2007

Visit us on the Web at www.cooperbussmann.com

1225 Broken Sound Pkwy. Suite F Boca Raton, FL 33487

Tel: +1-561-998-4100 Toll Free: +1-888-414-2645 Fax: +1-561-241-6640

This bulletin is intended to present product design solutions and technical information that will help the end user with design applications. Cooper Electronic Technologies reserves the right, without notice, to change design or construction of any products and to discontinue or limit distribution of any products. Cooper Electronic Technologies also reserves the right to change or update, without notice, any technical information contained in this bulletin. Once a product has been selected, it should be tested by the user in all possible applications.

Life Support Policy: Cooper Electronic Technologies does not authorize the use of any of its products for use in life support devices or systems without the express written approval of an officer of the Company. Life support systems are devices which support or sustain life, and whose failure to perform, when properly used in accordance with instructions for use provided in the labeling, can be reasonably expected to result in significant injury to the user.