E30516

Screw-in adapter for process sensors

ADAPT G1/2 / 1NPT

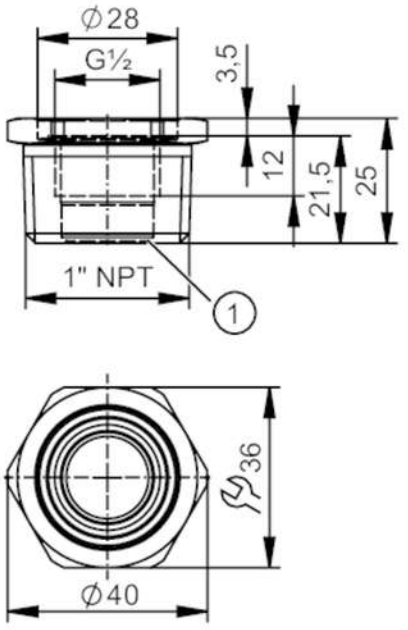

1 sealing edge

Application		
Pressure rating	[bar]	400
Tests / approvals		
Pressure Equipment Directive		A possible classification to PED depends on the application and has to be carried out by the user / operator.
Pressure Equipment Directive EAC		The adapter is intended for use in devices, machines and installations that do not fall under the categories of the technical rule TR CU 032/2013.
Safety instructions		The compatibility between medium and product material has to be checked in all applications.
Mechanical data		
Weight	[g]	131.6
Materials		stainless steel (1.4435 / 316L)
Sensor connection		G 1/2
Process connection		threaded connection 1" NPT
Remarks		
Pack quantity		1 pcs.