OPERATING VOLTAGE	2–WIRE AC/DC, 20–250 VAC/VDC
OUTPUT FUNCTION	CONNECTION PROGRAMMABLE
EMBEDDABLE	YES
RATED OPERATING DISTANCE	40 mm
APPROVAL OR CERTIFICATION	CSA (C US), CE
SHORT–CIRCUIT PROTECTION	NO
WELD–FIELD IMMUNITY	NO
SWITCHING FREQUENCY	20 Hz
LINE FREQUENCY	40–60 Hz
DIFFERENTIAL TRAVEL <HYSTERESIS>	3–15% (5% TYPICAL)
VOLTAGE DROP ACROSS CONDUCTING SENSOR	≤7.0 V AT 500 mA
CONTINUOUS LOAD CURRENT	≤500 mA
OFF–STATE <LEAKAGE> CURRENT	≤1.7 mA
MINIMUM LOAD CURRENT	≥5.0 mA
INRUSH CURRENT	≤8.0 A (≤10 ms, 5% DUTY CYCLE)
TIME DELAY BEFORE AVAILABILITY	≤80 ms
POWER–ON EFFECT	PER IEC 947–5–2
TRANSIENT PROTECTION	PER EN 60947–5–2
OPERATING TEMPERATURE	–25°C TO +70°C (–13°F TO + 158°F)
SHOCK	30 g, 11 ms
VIBRATION	55 Hz, 1 mm AMPLITUDE (ALL 3 PLANES)
REPEATABILITY	≤2% OF RATED OPERATING DISTANCE
NUMBER OF LEDS	2
LED FUNCTION <RED>	OUTPUT ENERGIZED
LED FUNCTION <GREEN>	POWER ON
ENCLOSURE	MEETS NEMA 1,3,4,6,13, AND IEC IP 67
CONNECTION	½–14 NPT CONDUIT FITTING
HOUSING MATERIAL	PBT–GF30–V0 PLASTIC
TERMINAL CHAMBER COVER MATERIAL	TROGAMID T

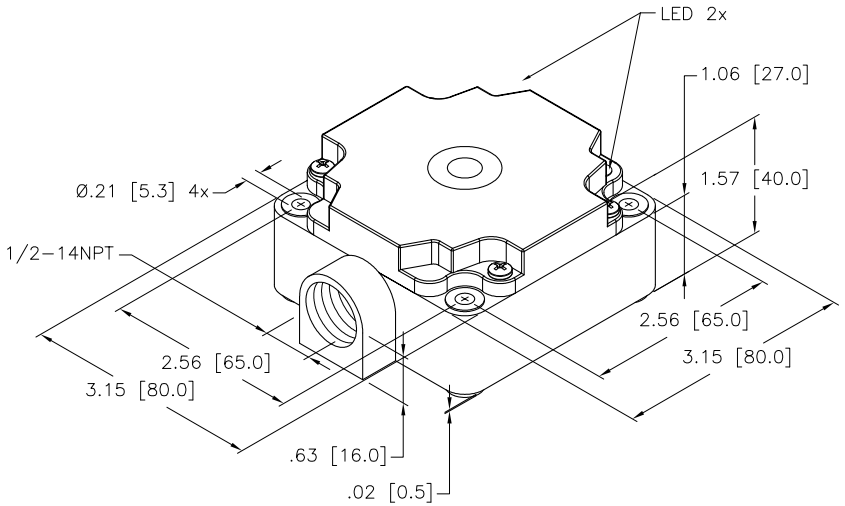

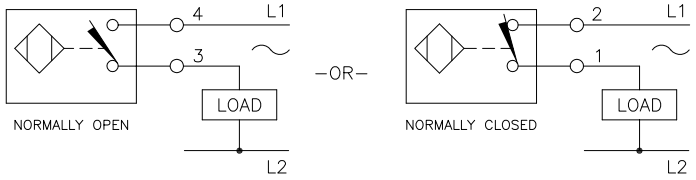

CAUTION! NOT SHORT–CIRCUIT PROTECTED. AN ELECTRICAL SHOCK HAZARD EXISTS INSIDE OF TERMINAL CHAMBER–STYLE SENSORS WHENEVER POWER IS APPLIED. REMOVE ALL POWER TO THE SENSOR WHENEVER SENSOR WIRING IS EXPOSED.

NOTE: ALL DIMENSIONAL TOLERANCES ±1.0 mm.

REV	DESCRIPTION	BY	DATE	ECO NO.
C	UPDATE VOLTAGE SPEC FROM VAC	TR	07/12/07	18321

SOURCE DRAWING – FOR REFERENCE ONLY

RELATED DOCUMENTS
1.
2.
3.
4.

3RD ANGLE PROJECTION

MATERIAL

FINISH

ALL DIMENSIONS DISPLAYED ON THIS DRAWING ARE FOR REFERENCE ONLY

CONTACT TURCK FOR MORE INFORMATION

THIS DRAWING IS PROPERTY OF TURCK INC. USE OF THIS DOCUMENT WITHOUT WRITTEN PERMISSION IS PROHIBITED.

TURCK INC
High Technology Sensors and Automation Controls
3000 CAMPUS DRIVE
MINNEAPOLIS, MN 55441
1–800–544–7769
(763) 553–7300
(763) 553–0708 fax
turck.com

DRFT CBM | DATE 09/13/00
DSGN | SCALE NONE

UNIT OF MEASUREMENT
INCH [MILLIMETER]
DO NOT SCALE THIS DRAWING

DESCRIPTION: Bi40–CP80–FZ3X2

IDENTIFICATION NO.: M1340401 | REV: C

FILE: M1340401 | SHEET 1 OF 1