DV2530

5-segment light tower with IO-Link control

LED-Tower-5/IOL/Buzzer

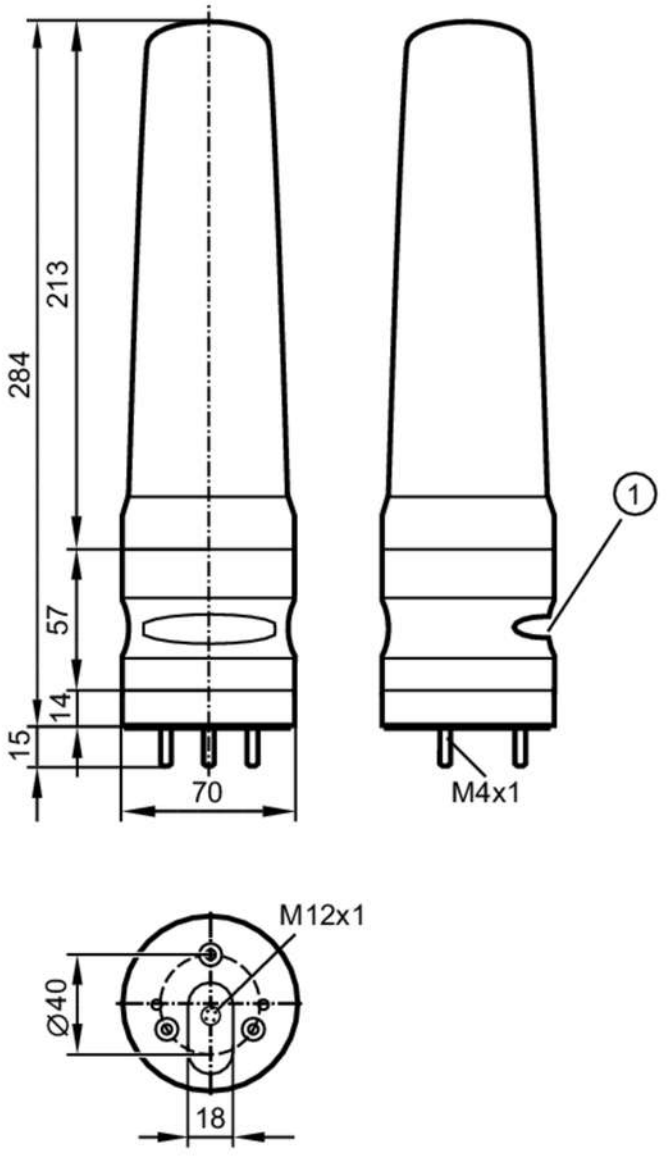

1 buzzer

Application		
Application		signalling machine conditions
Electrical data		
Operating voltage	[V]	18...30 DC; (to SELV/PELV)
Nominal voltage DC	[V]	24
Current consumption	[mA]	< 200
Inputs		
Input current High	[mA]	6
Interfaces		
Communication interface		IO-Link
Transmission type		COM2 (38,4 kBaud)

DV2530

5-segment light tower with IO-Link control

LED-Tower-5/IOL/Buzzer

IO-Link revision		1.1	
SDCI standard		IEC 61131-9	
SIO mode		yes	
Required master port type		A	
Min. process cycle time	[ms]	3.2	
Supported DeviceIDs		**Type of operation**	**DeviceID**
		default	841
Operating conditions			
Ambient temperature	[°C]	-25...50	
Storage temperature	[°C]	-40...75	
Max. relative air humidity	[%]	90	
Air pressure	[kPa]	< 106	
Max. height above sea level	[m]	2000	
Protection		IP 54	
Mechanical data			
Weight	[g]	563.5	
Dimensions	[mm]	Ø 70 / L = 284	
Materials		housing: ABS; lens: PC	
Displays / operating elements			
Display		LED segment	5 x 4 LED
Acoustic signal		buzzer	
Max. sound pressure	[dB]	85	
Accessories			
Accessories (optional)		mounting base, E89060	
		wall bracket, E89061	
		Mounting adapter, E89063	
		bracket with lateral cable entry, E89064	
		mounting tube, E89065	
		mounting tube, E89066	
		mounting tube, E89067	
Remarks			
Remarks		For further information please see the operating instructions.	
Pack quantity		1 pcs.	

DV2530

5-segment light tower with IO-Link control

LED-Tower-5/IOL/Buzzer

Electrical connection - plug

Connector: M12; coding: A

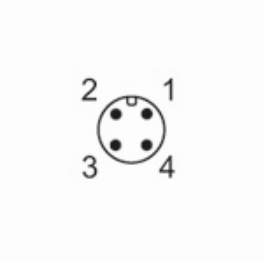

1	UB+
2	not used
3	UB-
4	IO-Link (C/Q)

Diagrams and graphs

wall mounting

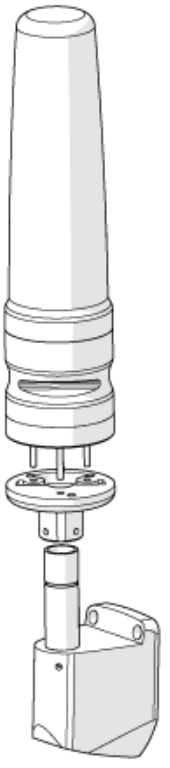

DV2530

5-segment light tower with IO-Link control

LED-Tower-5/IOL/Buzzer

base mounting

