# Product datasheet
## Characteristics

# XZCE13M125M
adaptor, metal - tapped hole Pg 13.5 - for male connector, M12, 5-wire

Price* : 19.48 GBP

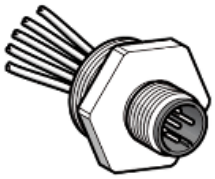

## Main

| | |
|---|---|
| Accessory / separate part designation | 5-wire connector adaptor |
| Accessory / separate part category | Cabling accessories |
| Accessory / separate part type | Connector adaptor |
| Cable composition | 4 x 0.34 mm² + 1 x 0.5 mm² |
| Thread type | Pg 13.5 |
| [In] rated current | 4 A |

## Complementary

| | |
|---|---|
| Cable length | 100 mm |
| Total number of wires | 5 |
| Electrical connection | 1 male connector M12 5 straight |
| Cable connector fixing | Screw-on |
| Body material | Metal |
| Insulation resistance | > 1000000000 Ohm |
| Resistance across terminals | <= 5000 mOhm |
| [Ue] rated operational voltage | 250 V AC<br>300 V DC |
| Product weight | 0.025 kg |

## Environment

| | |
|---|---|
| IP degree of protection | IP67 |
| Ambient air temperature for operation | -25...80 °C |

## Offer Sustainability

| | |
|---|---|
| RoHS (date code: YYWW) | Compliant - since 0545 - Schneider Electric declaration of conformity<br>Schneider Electric declaration of conformity |

## Contractual warranty

| | |
|---|---|
| Warranty period | 18 months |

Disclaimer: This documentation is not intended as a substitute for and is not to be used for determining suitability or reliability of these products for specific user applications

# XZCE13M125M

## Dimensions

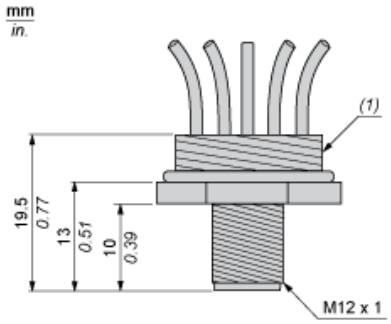


(1) Pg 13.5 cable gland

## Connections and Schemes

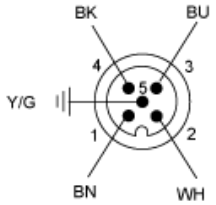


BN : Brown
BK : Black
BU : Blue
Y/G : Yellow / Green
WH : White