Brand of NTN corporation

Technical data

EXPE.206

Bearing units



Grey cast housing, radial insert ball bearing with eccentric locking collar, seal with slinger

KIT CONTENT

EX206G2, PE206

VISUAL (S)

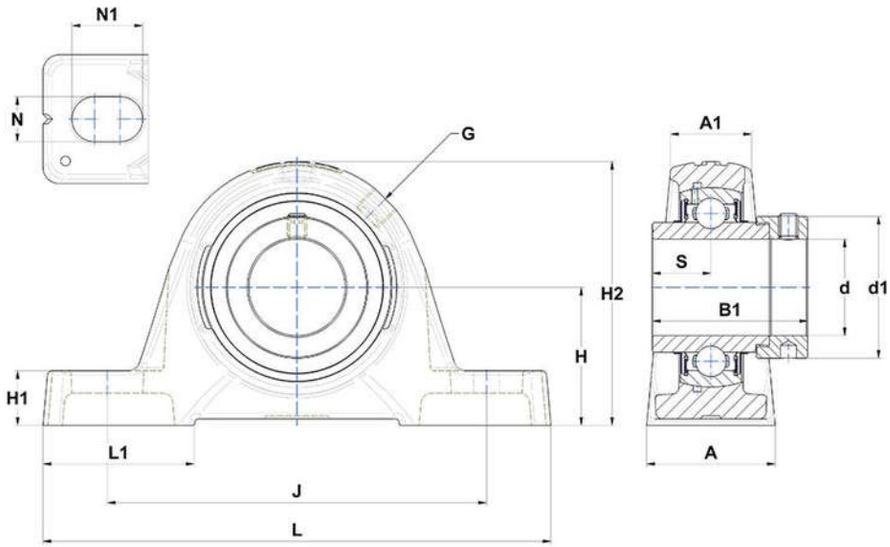

PRODUCT DEFINITION

Brand	SNR
A - Housing width	40 mm
A1 - Housing top width	25 mm
B - Width of Inner Ring	36,4 mm
d - Shaft diameter	30 mm
d1 - Outer dia of eccent. Lock. collar / nut of adapter sleeve	44,1 mm

NTN Europe
1 rue des Usines · BP 2017 · 74010 Annecy Cedex · France · Tel. +33 (0)4 50 65 30 00
S.A. au capital de 322 639 919 € · RCS ANNECY B 325 821 072 · Id. Fiscale : FR 48 325 821 072
SIRET 325 821 072 00015 · Code APE 2815 Z · Code NACE 28.15

PRODUCT DEFINITION	
G - Grease fitting	R1/8"
H - Distance mounting base to centerline spheric. seating diam.	42,9 mm
H1 - Housing foot height	17 mm
H2 - Housing height	82 mm
J - Mounting holes distance	118 mm
L - Housing length	158 mm
L1 - Housing foot length	47 mm
N - Mounting hole dimension	14 mm
N1 - Mounting hole length	22 mm
S - Distance front side/bearing centre	18,2 mm

PRODUCT PERFORMANCE	
C - Dynamic load rating	19500000 mN
C0 - Static load rating	11200000 mN
Operating temperature min.	253,15 °K
Operating temperature max.	373,15 °K

OTHER FEATURES	
Mass	1,21 kg
Recommended tightening torque for set screw	11.5 N-m