OK5022

Fibre-optic amplifier

OKF-FNKG/US-100-DNF

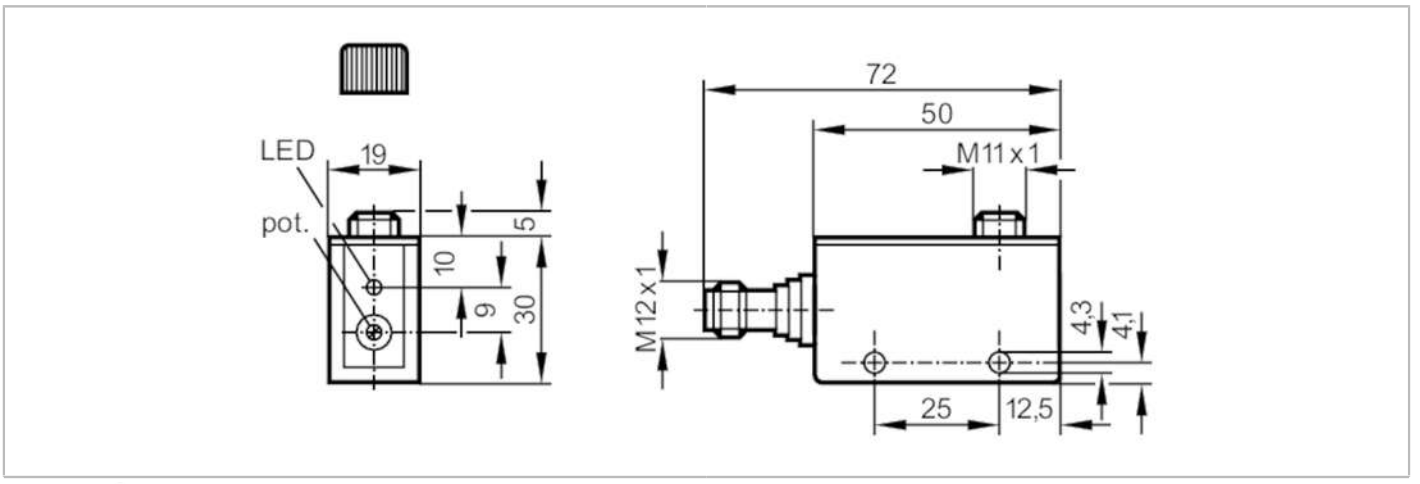

Product characteristics		
Type of light		red light
Housing		rectangular
Electrical data		
Operating voltage	[V]	10...36 DC
Current consumption	[mA]	30; ((24 V))
Protection class		III
Reverse polarity protection		yes
Type of light		red light
Wave length	[nm]	660
Outputs		
Electrical design		NPN
Output function		light-on/dark-on mode; (programmable)
Max. voltage drop switching output DC	[V]	2.5
Permanent current rating of switching output DC	[mA]	250
Switching frequency DC	[Hz]	120
Short-circuit protection		yes
Type of short-circuit protection		pulsed
Overload protection		yes
Detection zone		
Range	[m]	0...0.12; (Through-beam sensor)
Range	[mm]	0...40; (Diffuse reflection sensor)
Range adjustable		yes
Operating conditions		
Ambient temperature	[°C]	-25...60
Protection		IP 65

OK5022

Fibre-optic amplifier

OKF-FNKG/US-100-DNF

Tests / approvals			
EMC		EN 60947-5-2	
MTTF	[years]	529	
Mechanical data			
Weight	[g]	66	
Housing		rectangular	
Dimensions	[mm]	50 x 19 x 35	
Materials		PPO modified	
Lens alignment		side lens	
Displays / operating elements			
Display		switching status	1 x LED, yellow
Accessories			
Items supplied		screwdrivers	
		screws: 2 x M4 x 25	
		washers: 2	
		spring washers: 2	
		Nuts: 2	
Remarks			
Remarks		light-on mode corresponds to the NC output function for through-beam fibre optics	
		corresponds to the NO output function for diffuse-reflection fibre optics	
		dark-on mode corresponds to the NO output function for through-beam fibre optics	
		corresponds to the NC output function for diffuse-reflection fibre optics	
Pack quantity		1 pcs.	

Electrical connection

Connector: 1 x M12; coding: A



Connection

