DATA SHEET

N28xxA/B Passive Probes

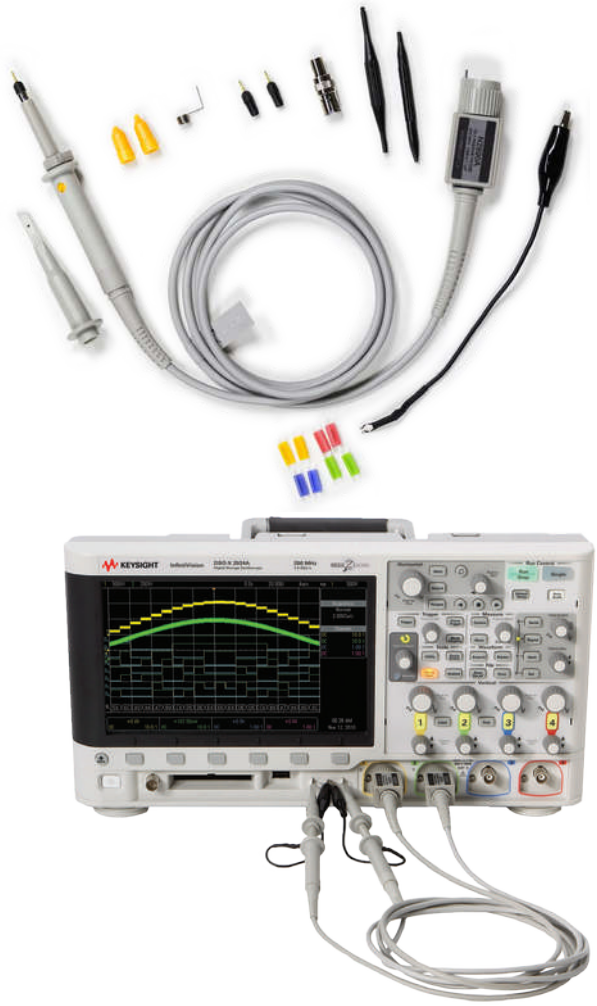

KEYSIGHT TECHNOLOGIES

Introduction

The Keysight N28xxA/B low-cost, general-purpose passive probes provide up to 500 MHz bandwidth and feature a high input resistance of 10 MΩ for low probe loading. These probes provide a 10:1 attenuation ratio except for the N2889A which provides a switch in the probe handle for switching the attenuation ratio between 1:1 and 10:1.

The probes are compatible with Keysight InfiniiVision and Infiniium Series oscilloscopes with 1 MΩ BNC input.

The N284xA Series passive probes are the frequency tuned versions of the N2862B/63B/89A/90A, offering more linear frequency response with Keysight oscilloscopes.



N2840A/41A/42A/43A/53A

Characteristics

Probe characteristics	N2840A	N2862B/N2841A	N2863B /N2842A/N2853A	N2889A	N2890A/N2843A
Bandwidth (–3 dB)	50 MHz	150 MHz	300 MHz (N2863B, N2842A), 350 MHz (N2853A)	350 MHz (at 10:1), 10 MHz (at 1:1)	500 MHz
Rise time (10 to 90%)	7 nsec	2.33 nsec	1.16 nsec (N2863B, N2842A), 1 nsec (N2853A)	1 nsec (at 10:1), 35 nsec (at 1:1)	700 psec
Attenuation ratio	10:1	10:1	10:1	1:1/10:1 (switchable)	10:1
Input resistance (when terminated into 1 MΩ)	10 MΩ	10 MΩ	10 MΩ	10 MΩ (at 10:1), 1 MΩ (at 1:1)	10 MΩ
Input capacitance	15 pF	15 pF	11 pF	11 pF (at 10:1), 60 pF (at 1:1)	11 pF
Maximum input voltage	300 V RMS (or < 400 Vpk) mains isolated and CAT II	300 V RMS (or < 400 Vpk) mains isolated and CAT II	300 V RMS (or < 400 Vpk) mains isolated and CAT II	300 VRMS (or < 400 Vpk) mains isolated/CAT II (at 10:1), 150 V RMS mains isolated/CAT II (at 1:1)	300 V RMS (or < 400 Vpk) mains isolated and CAT II
Scope compensation range	5-30 pF	5-30 pF	5-30 pF	5-30 pF (at 10:1)	5-30 pF
Probe ID	Yes	Yes	Yes	No	Yes
Cable length	1.2 m	1.2 m	1.2 m (N2863B, N2842A), 2 m (N2853A)	1.3 m	1.3 m (N2890A), 1.2 m (N2843A)
Safety	Conformance to IEC-61010-031:2015				
Operating temperature	0 to 50 °C, 80% RH non-condensing				
Storage temperature	0 to 50 °C, 80% RH non-condensing				
Altitude	2000m/indoor use				

Compensation Adjustments

These probes can be adjusted for low-frequency and high-frequency compensation. For the best measurement results you should compensate your probe to match its characteristics to the oscilloscope. A poorly compensated probe can introduce measurement errors. Low-frequency compensation should be performed before performing high-frequency compensation.

Low-frequency compensation

1. Connect the probe from the appropriate oscilloscope channel to the 1-kHz square wave source.
2. Press Autoscale. Adjust the oscilloscope to display two to three cycles of the waveform over two to six vertical divisions.
3. Set the low-frequency (LF) compensation adjustment on the probe for the flattest pulse possible (see Figure 3).



Figure 1. Low-frequency compensation adjustment (for N2862B/63B/89A/90A).



Figure 2. Low-frequency compensation adjustment (for N2840A/41A/42A/43A/53A)

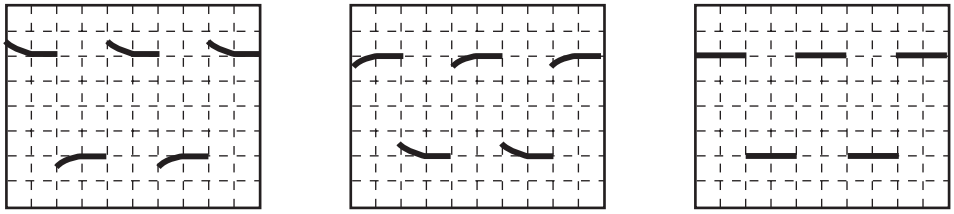

Figure 3.

Compensation Adjustments (Continued)

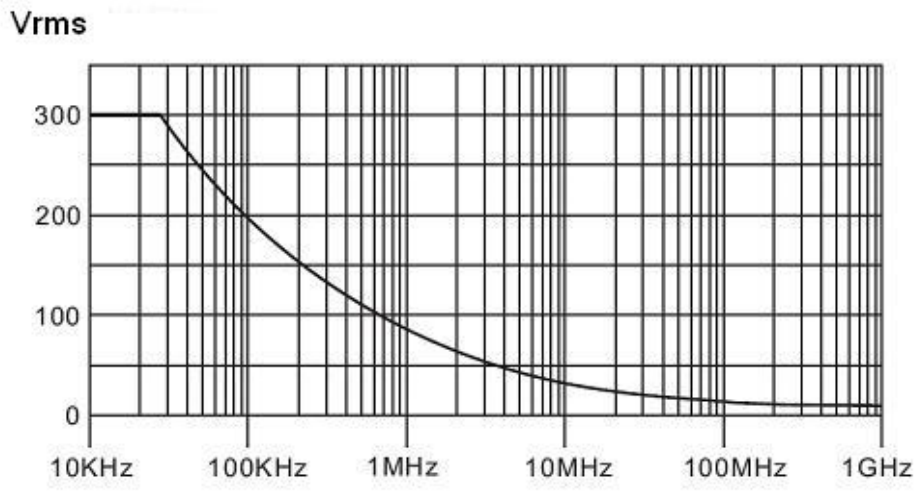

Figure 4. Voltage derating curve @10:1 attenuation ratio.

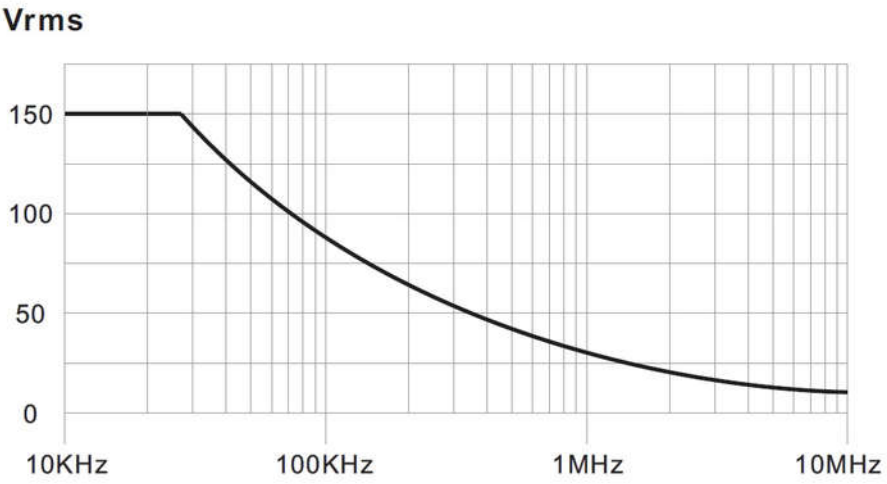

Figure 5. Voltage derating curve @1:1 attenuation ratio (N2889A)

Accessories



Figure 6. With standard accessories included in the probe

Standard accessories

Item	Description	Quantity
1	Retractable hook	1
2	Adjustment tools	2 (with N2889A/90A)
		1 (with all others)
3	Insulating cap	1
4	IC insulating cap	1
5	Identification tags (green,yellow, purple and pink)	2 each
6	Probe tip	2
7	Ground spring	1
8	BNC adapter	1
9	Ground lead (black 12 cm)	1

N2856A passive probe accessory kit

The N2856A passive probe accessory kit includes all of the standard accessories for the N2840A, N2841A, N2842A, N2843A, and N2853A passive probes.

Contents:

- Retractable hook
- Adjustment Tools
- Insulating cap
- IC insulating cap
- Identification tags (green, yellow, purple, and pink) (2 each)
- Probe tips
- Ground spring
- BNC adapter
- Ground lead (12 cm)

Accessories (Continued)

Replacement accessories

- N2857A alligator ground lead (qty 1)
- N2858A retractable hook tip adapter (qty 1)
- N2859A replaceable probe tip (qty 1)
- N4826A dual lead adapter (qty 2)
- N4827A PCB socket adapter (qty 2)
- N4828A ground spring, 5 mm (qty 2)

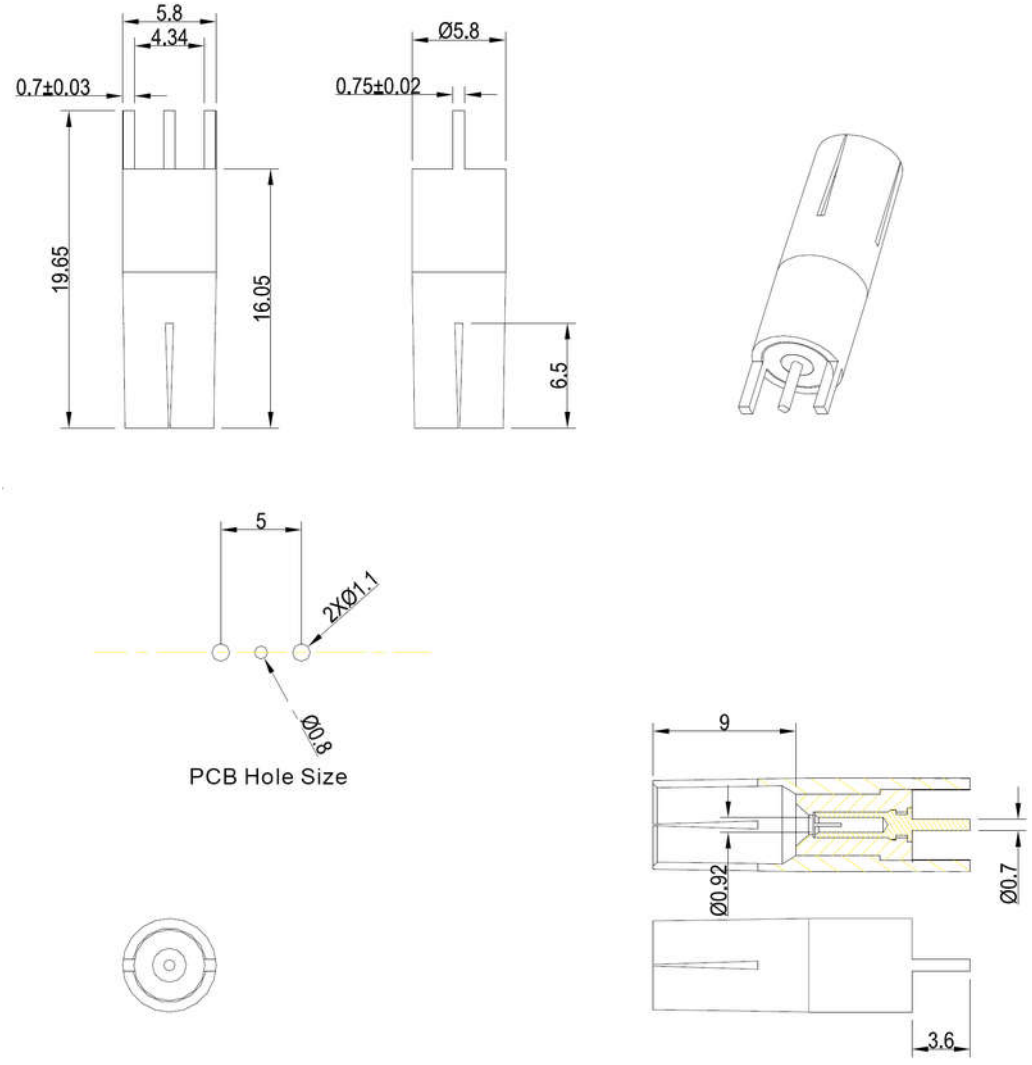

unit : mm

Figure 7. N4827A PCB socket adapter dimension and foot print information.

www.keysight.com/find/probes

Learn more at: www.keysight.com

For more information on Keysight Technologies' products, applications or services, please contact your local Keysight office. The complete list is available at: www.keysight.com/find/contactus

KEYSIGHT TECHNOLOGIES

This information is subject to change without notice. © Keysight Technologies, 2018, Published in USA, October 5, 2018, 5990-7111EN