PCIR101 - PCIR102

SIGNAL CONDITIONER WITH VOLTAGE (101), CURRENT 4...20mA (102) OUTPUT FOR DISPLACEMENT TRANSDUCERS



Main features

- *Interface module integrated in the connector*
- *Standard output 0...10Vdc (PCIR 101)*
- *Standard output 4...20mA(PCIR 102)*
- *High linearity*
- *Adjustable Zero and Span*
- *Low zero and span thermal drift*
- *4 pole female DIN43650 connector for LTM and PKM potentiometer*
- *DIN 43650 4-pin female connector for direct connection to LTM and PKM potentiometers (the DIN 43650 connector in the PCM series is smaller and cannot be connected directly)*

The signal conditioner with 0...10Vdc (PCIR101) or 4...20mA (PCIR102) output for displacement transducers are manufactured with a single SMD circuit with high stability electronics components that grant a very good linearity and thermal stability. The circuit is integrated in a 4-pole connector, with the possibility to adjust the trimmers of zero and span. It is possible to rotate the internal part of the connector by 90° steps, allowing the installation of the conditioner on the transducer in four different directions.

TECHNICAL DATA

Model	**PCIR101**	**PCIR102**
Power supply	15...30Vdc	10...30Vdc
Max. current consumption	15mA	32mA
Output signal	0...10Vdc	4...20mA
ZERO adjustment range	±10% FSO	±10% FSO
SPAN adjustment range	±10% FSO	±10% FSO
Minimum load	10kOhm	see diagr.
Response time (10...90%FSO)	1 msec.	6 msec.
Output noise (RMS 10...400Hz)	<0,05%FSO	<0,05%FSO
Inverse polarity protection	YES	YES
Impulsive voltage peaks protect.	YES	YES
Zero and Span thermal drift in the compensated temp. range	<0,03% FSO/°C	<0,03% FSO/°C
Compensated temperat. range	-20...+80°C	-20...+80°C
Operating temperature range	-30...+85°C	-30...+85°C
Typical linearity error	0,01%FSO	0,01%FSO
Transducer supply	2,5Vdc ± 1%	1,65Vdc ± 1%
Transducer resistance	>700 Ohm	>700 Ohm
Input impedance	>10 MOhm	>10 MOhm
Protection degree	IP65	IP65
Connection cable diameter	0,5mm²	0,5mm²
Connection cable ø 4...10mm	3 wires with screen	2 wires with screen
Weight	80gr	80gr.

FSO: Full Scale Output (output signal at nominal pressure)

MECHANICAL DIMENSIONS

PCIR101

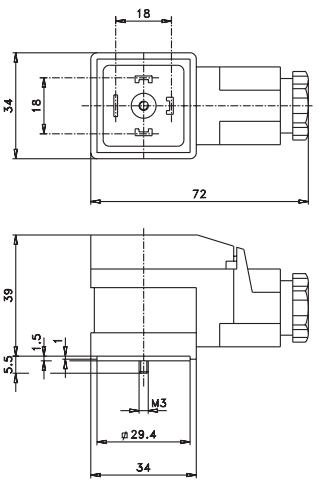

PCIR102

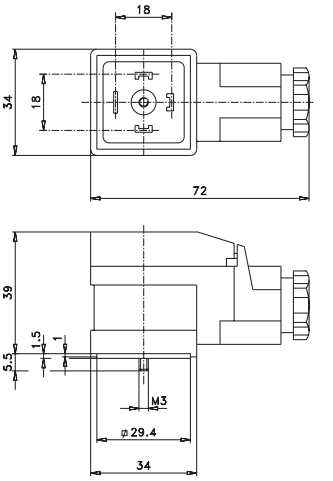

ELECTRICAL CONNECTIONS

PCIR101

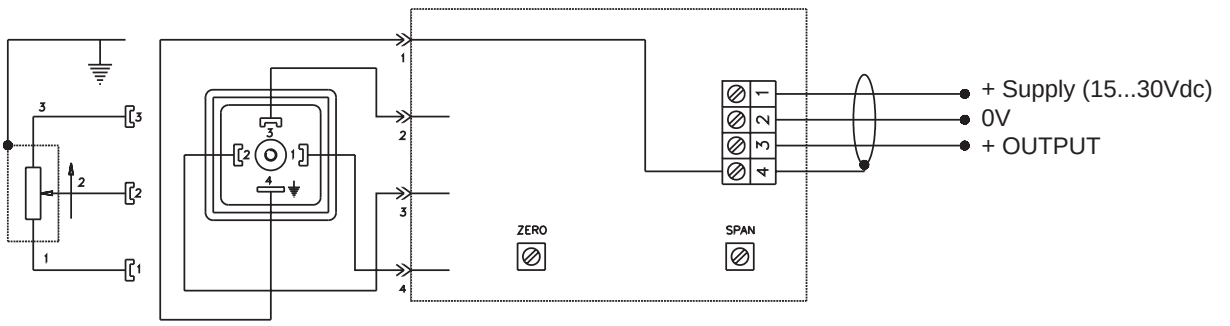

PCIR102

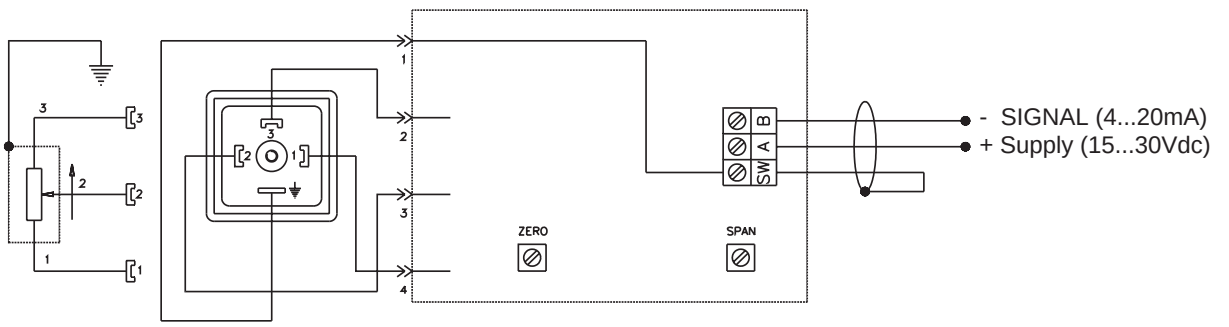

LOAD DIAGRAM

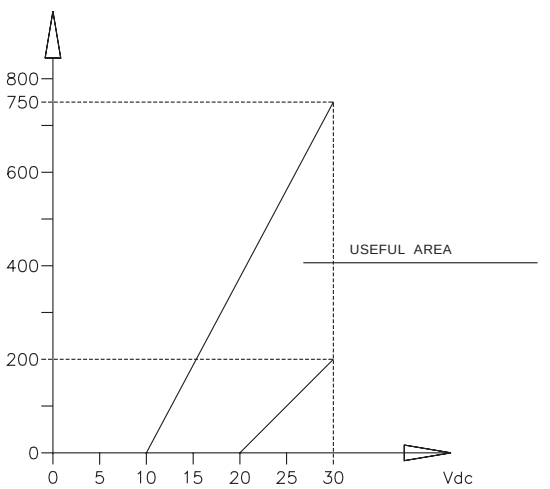

The diagram at side shows the optimum ratio between the load and supply voltage for the 4...20mA conditioner. For a correct function it is necessary to use a combination of load resistance and supply voltage that falls within the shaded area.

ORDER CODE

PCIR 10 □ □

OUTPUT	
0...10Vdc	**1**
4...20mA	**2**

Non standard mechanical and / or electrical features are available on request.

Ex.:**PCIR 101**
Signal conditioner with 10Vdc output.

GEFRAN spa reserves the right to make any kind of design or functional modification at any moment without prior notice

GEFRAN spa
via Sebina, 74
25050 PROVAGLIO D'ISEO (BS) - ITALIA
ph. 0309888.1 - fax. 0309839063
Internet: http://www.gefran.com