Brand of NTN corporation

Technical data

UKP312H

Bearing units



Grey cast housing, radial insert ball bearing with adapter sleeve,seal with slinger

KIT CONTENT

UK312G2H, P312

VISUAL (S)

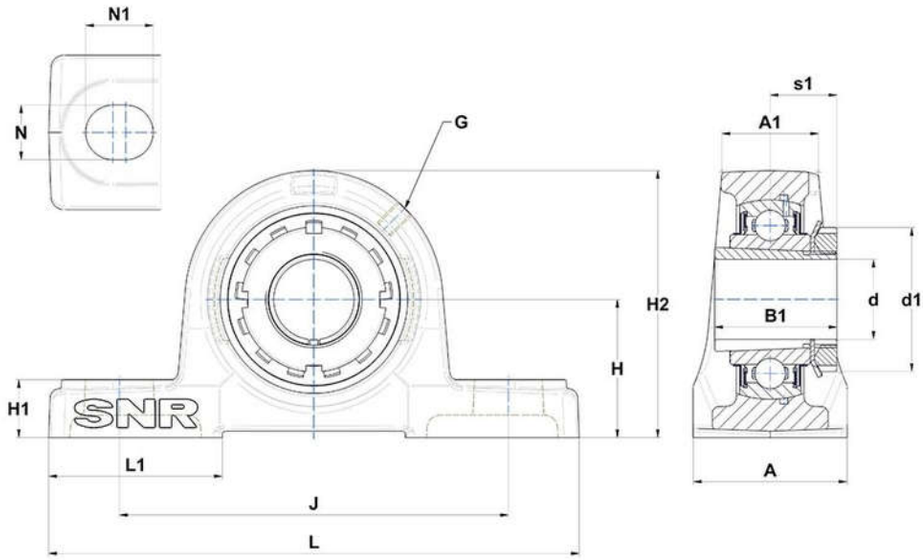

PRODUCT DEFINITION

Brand	SNR
A - Housing width	85 mm
A1 - Housing top width	54 mm
B - Width of Inner Ring	47 mm
d - Shaft diameter	55 mm
d1 - Outer dia of eccent. Lock. collar / nut of adapter sleeve	80 mm

UKP312H
Bearing units

PRODUCT DEFINITION	
G - Grease fitting	M6x1
H - Distance mounting base to centerline spheric. seating diam.	85 mm
H1 - Housing foot height	32 mm
H2 - Housing height	165 mm
J - Mounting holes distance	250 mm
L - Housing length	330 mm
L1 - Housing foot length	95 mm
N - Mounting hole dimension	25 mm
N1 - Mounting hole length	38 mm
s1 - Distance nut to middle of bearing raceway	36,5 mm

PRODUCT PERFORMANCE	
C - Dynamic load rating	81600000 mN
C0 - Static load rating	51800000 mN
Operating temperature min.	253,15 °K
Operating temperature max.	373,15 °K

OTHER FEATURES	
Mass	9,47 kg
Adapter sleeve designation	H2312