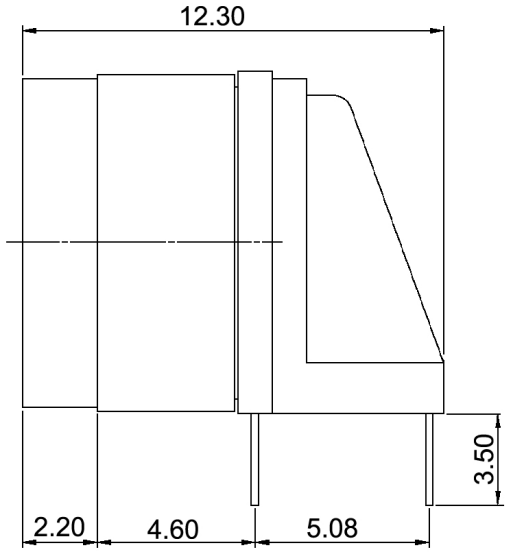

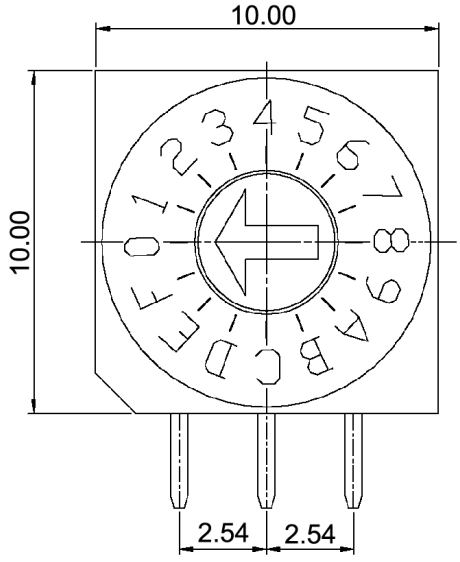

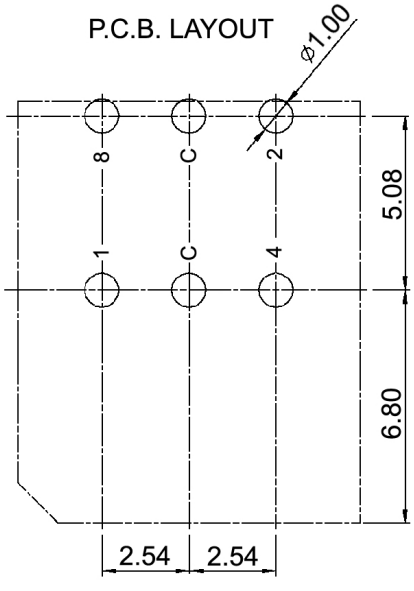

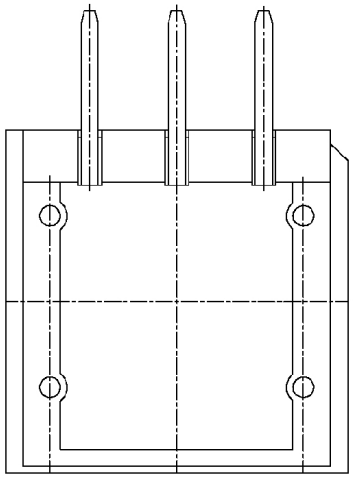

Specifications:

Contact rating:	switching:15mA, 24V DC non-switching: 100mA, 50V DC
Contact resistance:	80mOhm max.
Insulation resistance:	100MOhm min.
Mechanical life:	10 000 cycles
Operating force:	700gf max.
Operating temperature:	-40°C to +85°C
Storage temperature:	-40°C to +85°C
Soldering conditions:	pre-heat: max. 120°C, max. 70sec. wave soldering: max. 260°C, max. 10sec.
Color of actuator:	grey
IP rating:	IP67

Hexadecimal

16 Positions

	Real coded C	1	2	4	8
0	●				
1	●	●			
2	●		●		
3	●	●	●		
4	●			●	
5	●	●		●	
6	●		●	●	
7	●	●	●	●	
8	●				●
9	●	●			●
A	●		●		●
B	●	●	●		●
C	●			●	●
D	●	●		●	●
E	●		●	●	●
F	●	●	●	●	●

RoHS-conform 2002/95/EC

Tolerances: ≤ 10mm: / ≥ 10mm:			Date	Name
			08/07	dr
Soldering conditions	01/11	dr		
IP rating	06/09	dr		
Operating temperature	11/08	dr		
Temperatures	01/08	dr		
Modifications	**Date**	**Name**		

DRR 60016

knitter-switch

30 11 92

Page 1/1