TF140DU thermal overload relays
66 ... 142 A



2CDC231012V0012

TF140DU-110

Description

The TF140DU thermal overload relays are economic electromechanical protection devices for the main circuit. They offer reliable protection for motors in the event of overload or phase failure. The devices have trip class 10A.

The thermal overload relays are three pole relays with bimetal tripping elements. The motor current flows through the bimetal tripping elements and heats them directly and indirectly. In case of an overload (over current), the bimetal elements bent as a result of the heating. This leads to a release of the relay and a change of the contacts switching position (95-96 / 97-98).

- Manual or automatic reset selectable
- Phase loss sensitive acc. to IEC/EN 60947-4-1
- Two electrically isolated auxiliary contacts – 1 N.O. + 1 N.C.
- TEST and STOP function – Trip indication on the front
- Temperature compensation
- Suitable for three- and single-phase applications

Ordering details

Setting range A	Short-circuit protective device	Trip class	Type	Order code		Weight (1 pce) kg
66 ... 90	200 A, Fuse type gG	10A	TF140DU-90	1SAZ431201R1001		0.820
80 ... 110	224 A, Fuse type gG	10A	TF140DU-110	1SAZ431201R1002		0.820
100 ... 135	224 A, Fuse type gG	10A	TF140DU-135	1SAZ431201R1003		0.820
110 ... 142	250 A, Fuse type gG	10A	TF140DU-142	1SAZ431201R1004		0.820

Main dimensions mm, *inches*

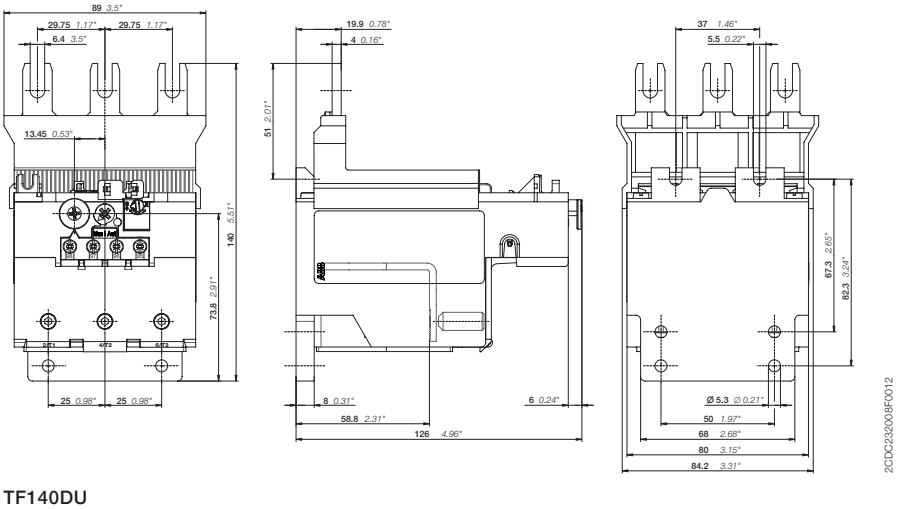

2CDC232008F0012

TF140DU

2CDC106054C0201

TF140DU thermal overload relays
Technical data

Main circuit – Utilization characteristics according to IEC/EN

Type	**TF140DU**
Standards	IEC/EN 60947-1, IEC/EN 60947-4-1, IEC/EN 60947-5-1
Rated operational voltage U_e	690 V AC
Rated frequency	DC, 50/60 Hz
Frequency range	0 ... 400 Hz
Trip class	10A
Number of poles	3
Duty time	100 %
Operating frequency without early tripping	Up to 15 operations/h, see "Technical diagram – Intermittent periodic duty"
Rated impulse withstand voltage U_{imp}	8 kV
Rated insulation voltage U_i	690 V

Auxiliary circuit according to IEC/EN

Type		**TF140DU**
Rated operational voltage U_e		500 V AC, 440 V DC
Conventional free air thermal current I_{th}	**N.C., 95-96**	10 A
	N.O., 97-98	6 A
Rated frequency		DC, 50/60 Hz
Number of poles		1 N.O. + 1 N.C.
I_e / Rated operational current AC-15 acc. to IEC/EN 60947-5-1 for utilization category		
110-120 V	**N.C., 95-96**	3.00 A
	N.O., 97-98	1.50 A
220-230-240 V	**N.C., 95-96**	1.50 A
	N.O., 97-98	1.50 A
440 V	**N.C., 95-96**	1.00 A
	N.O., 97-98	1.00 A
480-500 V	**N.C., 95-96**	1.00 A
	N.O., 97-98	1.00 A
I_e / Rated operational current DC-13 acc. to IEC/EN 60947-5-1 for utilization category		
24 V	**N.C., 95-96**	1.25 A
	N.O., 97-98	1.25 A
60 V	**N.C., 95-96**	0.25 A
	N.O., 97-98	0.25 A
110-120-125 V	**N.C., 95-96**	0.25 A
	N.O., 97-98	0.25 A
250 V	**N.C., 95-96**	0.12 A
	N.O., 97-98	0.04 A
Minimum switching capacity		17 V / 3 mA
Short-circuit protective device	**N.C., 95-96**	10 A, Fuse type gG
	N.O., 97-98	6 A, Fuse type gG
Rated impulse withstand voltage U_{imp}		6 kV
Rated insulation voltage U_i		690 V

Technical diagram – Intermittent periodic duty

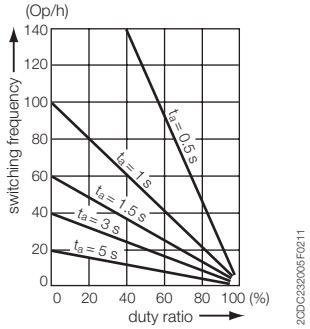

2CDC232005F0211

t_a: Motor starting time

2CDC106054C0201

TF140DU thermal overload relays
Technical data

Main circuit – Utilization characteristics according to UL/CSA

Type	TF140DU
Standards	UL 508, CSA 22.2 No. 14, UL 60947-4-1A
Maximum operational voltage	600 V AC
Trip rating	125 % of FLA
Full load amps (FLA)	See table "Full load amps and short-circuit protective device"
Short-circuit rating RMS symmetrical	See table "Full load amps and short-circuit protective device"
Short-circuit protective device	See table "Full load amps and short-circuit protective device"

Auxiliary circuit according to UL/CSA

Type		TF140DU
Contact rating	N.C., 95-96	B600
	N.O., 97-98	C300
Conventional thermal current	N.C./N.O.	10 A / 6 A

Full load amps and short-circuit protective device

Type	Full load amps (FLA)	Short-circuit protective device					
		480 / 600 V AC		480 / 600 V AC		480 / 600 V AC	
		Short circuit rating RMS symmetrical	Fuse type	Short circuit rating RMS symmetrical	Fuse type	Short circuit rating RMS symmetrical	Listed circuit breaker
TF140DU-90	90 A	10 kA	250 A, K5 / RK5	100 kA	250 A, Class J	100 kA	250 A
TF140DU-110	110 A	10 kA	250 A, K5 / RK5	100 kA	250 A, Class J	100 kA	250 A
TF140DU-135	135 A	10 kA	250 A, K5 / RK5	100 kA	250 A, Class J	100 kA	250 A
TF140DU-142	142 A	10 kA	250 A, K5 / RK5	100 kA	250 A, Class J	100 kA	250 A

2CDC106054C0201

TF140DU thermal overload relays
Technical data

General technical data

Type			**TF140DU**
Pollution degree			3
Phase loss sensitive			Yes
Ambient air temperature			
Operation	Open - compensated acc. IEC/EN 60947-4-1		-25 ... +55 °C
	Open		-25 ... +55 °C
Storage			-40 ... +70 °C
Ambient air temperature compensation			Acc. to IEC/EN 60947-4-1
Maximum operating altitude permissible			2000 m
Resistance to shock acc. to IEC 60068-2-27			12 g / 11 ms
Mounting position			Position 1-5
Mounting			Mount on the contactor and tighten the screws of the main circuit terminals
Degree of protection		**housing**	IP20
		main circuit terminals	IP00

Electrical connection

Main circuit

Type			**TF140DU**
Connecting capacity			
	Rigid	**1 x**	16 ... 70 mm²
		2 x	-
	Flexible	**1 x**	16 ... 70 mm²
		2 x	-
	Stranded acc. to UL/CSA	**1 x or 2 x**	AWG 6-2/0
	Flexible acc. to UL/CSA	**1 x or 2 x**	AWG 6-2/0
Stripping length			25 mm
Tightening torques			8 ... 10 Nm / 77 ... 88 lb.in
Connection screw			M8 (Hexagon)

Auxiliary circuit

Type			**TF140DU**
Connecting capacity			
	Rigid	**1 x or 2 x**	0.75 ... 4 mm²
	Flexible with ferrule	**1 x or 2 x**	0.75 ... 2.5 mm²
	Flexible with insulated ferrule	**1 x or 2 x**	0.75 ... 2.5 mm²
	Flexible	**1 x or 2 x**	0.75 ... 2.5 mm²
	Stranded acc. to UL/CSA	**1 x or 2 x**	AWG 18-14
	Flexible acc. to UL/CSA	**1 x or 2 x**	AWG 18-14
Stripping length			9 mm
Tightening torques			0.8 ... 1.3 Nm / 12 lb.in
Connection screw			M3.5 (Pozidriv 2)

2CDC106054C0201