Your Expert Partner for **Human Machine Interfaces**

Actuator

Distribution by
Rs-online

704.012.0

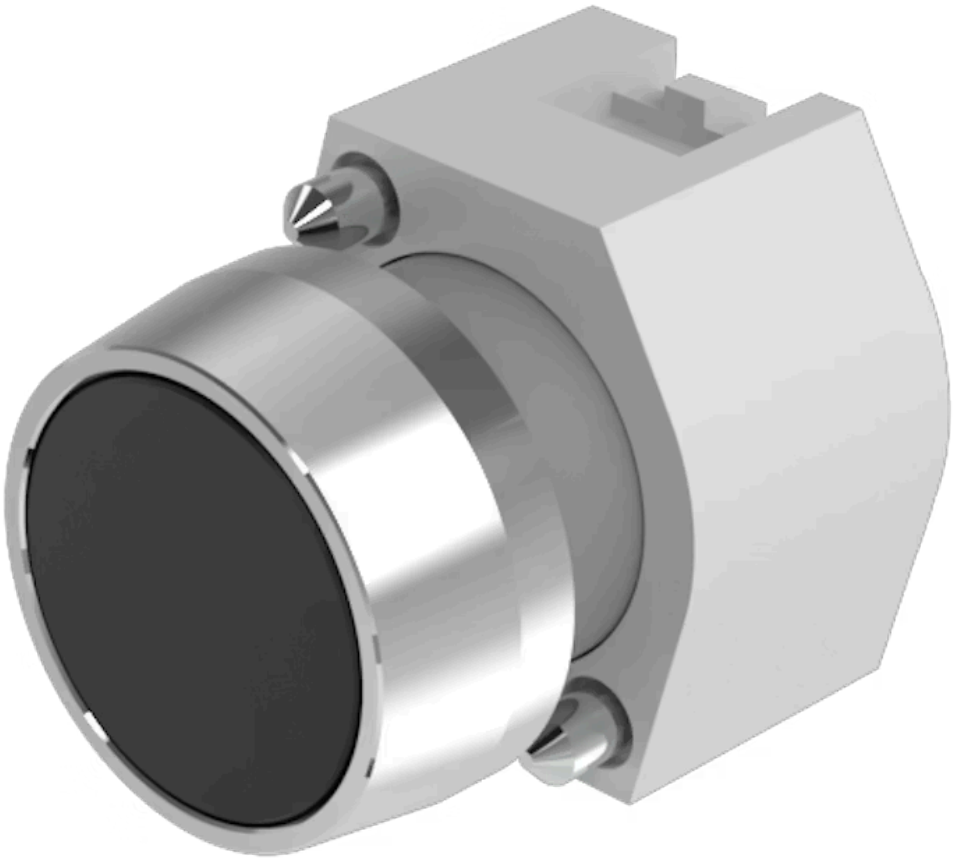

https://rs-online.eao.com/component/704.012.0...

Your product:



704.012.0
Actuator

FRONT

Front dimension:	Ø 29 mm
Front form:	Round
Front bezel colour:	Nature
Front bezel material:	Aluminium

MOUNTING

Design:	Raised
Mounting type:	Panel mounting

OPERATING-/INDICATION PART

Lens colour:	Black
Lens material:	Plastic
Lens illumination:	Non illuminated
Lens shape:	Flush
Lens optics:	opaque

ELECTRICAL CHARACTERISTICS

Standards:	The switches comply with the “Standards for low-voltage switching devices” DIN EN 60947-1

MECHANICAL CHARACTERISTICS

Switching action:	Momentary
Mechanical lifetime:	≤3 Mil. cycles of operation

Operating force:	8 N
Operating Travel:	ca. 5.8 mm ± 0.2 mm
Weight:	0.024 kg

AMBIENT CONDITION

IP Protection:	IP65 front side
Operating temperature:	– 40 °C ... + 55 °C
Storage temperature:	– 40 °C ... + 85 °C

CERTIFICATE

REACH:	REACH compliant
RoHS:	RoHS compliant

OTHER

Short Description:	Actuator, Ø 29 mm, Flush, Non illuminated, Black, Plastic, opaque, Round, Nature, Aluminium, anodised, Momentary
Housing colour:	Grey
Housing material:	Plastic
Product attributes:	Frontring with protective cover to be mounted with a torque of 0.4 Nm onto actuator
Hints:	Frontring with protective cover to be mounted with a torque of 0.4 Nm onto actuator Max. 3 switching elements can be clipped on
max. number of switching elements:	3
Wiring diagrams:	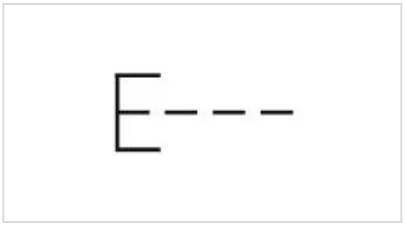

Mounting cut-outs:

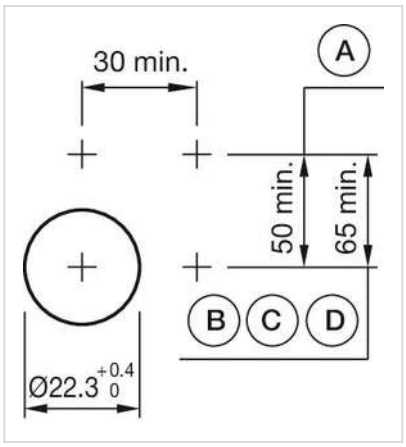

A = Screw terminal
B = Push-in terminal (PIT)
C = Plug-in terminal 6.3 mm x 0.8 mm
D = Double plug-in terminal 6.3 mm x 0.8 mm

Dimension drawings:

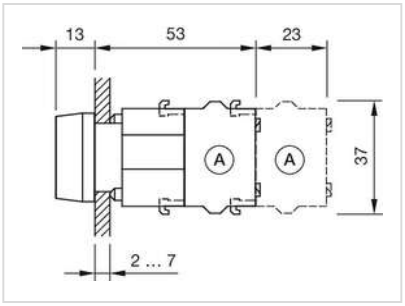

A = Screw terminal