CH Products

an APEM Group Company

TW series

Hall effect thumbwheels



The TW Series thumbwheel is a self centering single-axis device developed for thumb-actuated applications requiring proportional output. Utilizing non-contacting Hall effect technology for long life performance, the TW Series thumbwheel delivers up to 5 million thumb actuations. Configuration options include choice of linear voltage outputs as well as wheel colors. The TW Series thumbwheel is available as a stand-alone device or may be incorporated into one of our custom joysticks.



KEY FEATURES

- ❑ **5 million cycles**
- ❑ **Hall effect technology**
- ❑ **Proportional control**
- ❑ **Self-centering single-axis design**
- ❑ **Choice of wheel colors: red, gray, black, or blue**
- ❑ **EMI/RFI immunity**



TW series

Hall effect thumbwheels

OPTION SELECTION

TW [ ] [ ] [ ] [ ]

SERIES

MODEL

0	With Tab
1	Without Tab

OUTPUT

1	0V to 5V
2	0.5V to 4.5V
3	1V to 4V

COLOR

RED	Red
BLU	Blue
BLK	Black
GRY	Gray

SPRING TENSION

1	Standard
2	Light
3	Heavy

NOTES:

Mounting accessories: steel spring retainer, insertion tool, and sealing gasket.

SPECIFICATIONS

MECHANICAL (FOR X, Y AXES)		
Break Out Force	–	0.7N (0.15lbf)
Mechanical Angle of Movement	–	80°
Expected Life	–	5 million cycles
Lever Action (Centering)	–	Spring Centering

ENVIRONMENTAL		
Operating Temperature	–	-40°C to +85°C (-40°F to +185°F)
Storage Temperature	–	up to +85°C (+185°F)
Sealing	–	IP67*

ELECTRICAL		
Sensor	–	Hall effect
Resolution	–	3.2mV
Supply Voltage Range	–	4.5 - 5.5V
Reverse Polarity Max	–	-16V
Overvoltage Max	–	16V
Output Impedance	–	1.5Ω
Return to Center Voltage (No Load)	–	±40mV
Current Consumption Max	-	8.3mA

NOTES:

- All values are nominal.
- Exact specifications are subject to configuration. Contact Technical Support for the performance of your specific configuration.

* Electronics sealed to IP67.

TW series

Hall effect thumbwheels

DIMENSIONAL DRAWINGS



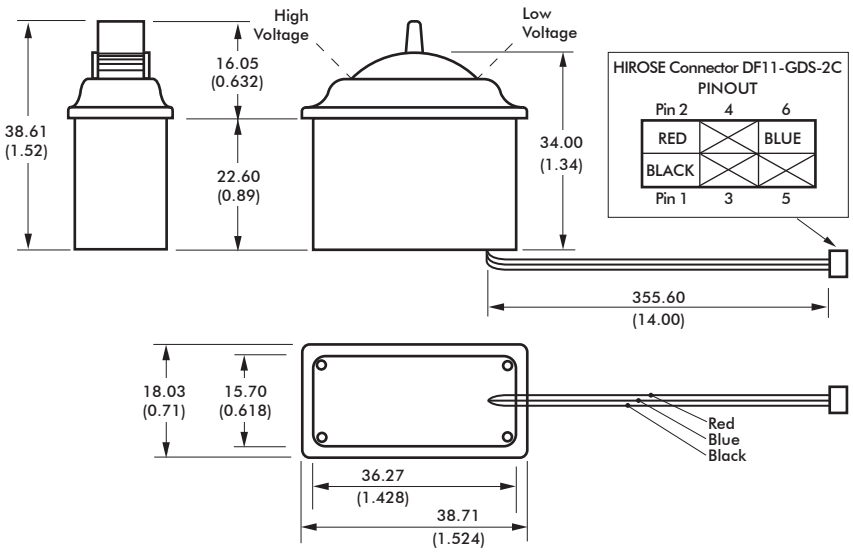

MOUNTING OPTIONS

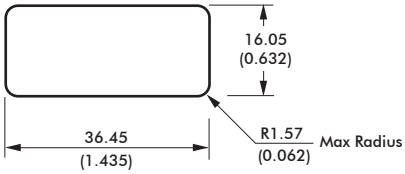

STEEL SPRING RETAINER*

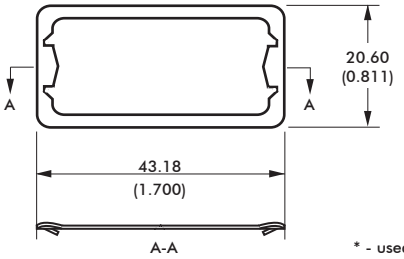

* - used for installation

NOTES:

1. Dimensions are in mm/(in)

EXAMPLE APPLICATION



INSTALLATION

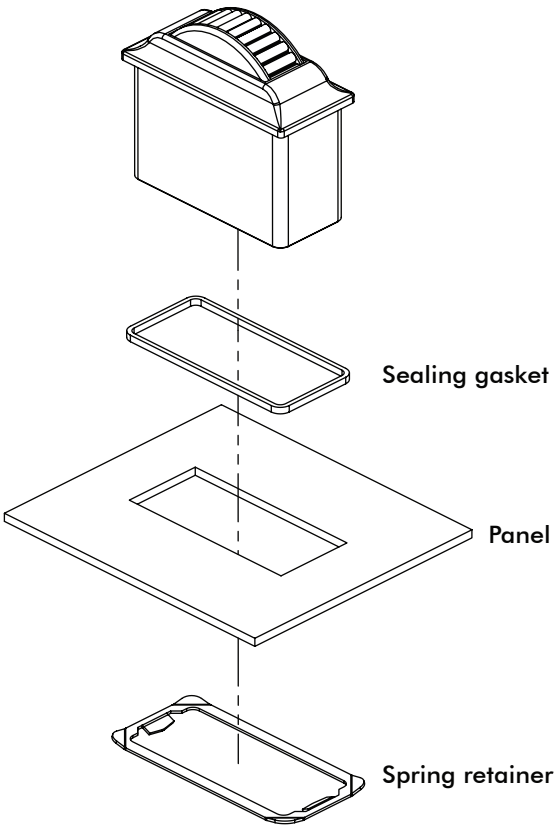

Note: The company reserves the right to change specifications without notice.

TW series

Hall effect thumbwheels

CONFIGURATION OPTIONS

OPTIONS



OPTIONS AVAILABLE: BLACK, RED, BLUE AND GRAY WHEELS WITH OR WITHOUT CENTER TAB.

LINEAR OUTPUT OPTIONS



DEFAULT WIRE COLOR CODE		
COLOR	FUNCTION	AWG
RED BLACK BLUE	+5V Ground Output	28

Note: The company reserves the right to change specifications without notice.