DI524A

Compact evaluation unit for speed monitoring

DIA3010-WRKG/IO/US/3D

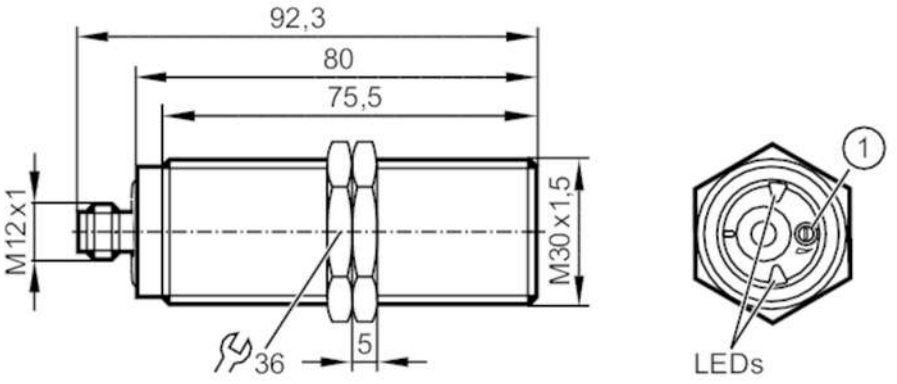

1 potentiometer

Product characteristics		
Electrical design		PNP/NPN
Output function		normally open / normally closed; (parameterisable)
Sensing range	[mm]	10
Communication interface		IO-Link
Housing		threaded type
Dimensions	[mm]	M30 x 1.5 / L = 92.3
Application		
Application		simple evaluation of rotating and linear movement with regard to underspeed; blocking
Electrical data		
Nominal voltage DC	[V]	10...36
Current consumption	[mA]	< 22
Protection class		III
Reverse polarity protection		yes
Outputs		
Electrical design		PNP/NPN
Output function		normally open / normally closed; (parameterisable)
Max. voltage drop switching output DC	[V]	2.5
Permanent current rating of switching output DC	[mA]	250
Short-time current rating of switching output	[mA]	250
Short-circuit proof		yes
Overload protection		yes
Detection zone		
Sensing range	[mm]	10
Sensing range adjustable		no
Operating distance	[mm]	0...8.1

DI524A

Compact evaluation unit for speed monitoring

DIA3010-WRKG/IO/US/3D

Measuring/setting range			
Setting range	[Imp/min]	5...3600	
Measuring principle		inductive	
Accuracy / deviations			
Correction factor		steel: 1 / stainless steel: 0.7 / brass: 0.5 / aluminium: 0.4 / copper: 0.3	
Hysteresis	[% of Sr]	10	
Response times			
Start-up delay	[s]	0...30	
Max. damping frequency	[Imp/min]	18000	
Software / programming			
Adjustment of the switch point		Multiturn potentiometer or IO-Link	
Interfaces			
Communication interface		IO-Link	
Operating conditions			
Ambient temperature	[°C]	-25...60	
Storage temperature	[°C]	-25...60	
Protection		IP 65; IP 67	
Tests / approvals			
Approval		IECEx BVS 17.0094X	
ATEX marking		Ex II 3D Ex tc IIIC T80°C Dc X	
EMC		EN 60947-5-2	
Shock resistance		DIN EN 60947-5-2	
Vibration resistance		DIN EN 60947-5-2	
MTTF	[years]	656	
Mechanical data			
Weight	[g]	268	
Housing		threaded type	
Mounting		flush mountable	
Dimensions	[mm]	M30 x 1.5 / L = 92.3	
Thread designation		M30 x 1.5	
Materials		brass special coating; PA; stainless steel; TPE-U	
Displays / operating elements			
Display		switching status	1 x LED, green
		input signal	1 x LED, yellow
Accessories			
Items supplied		lock nuts: 2	

DI524A

Compact evaluation unit for speed monitoring

DIA3010-WRKG/IO/US/3D

Electrical connection

Connector: 1 x M12; coding: A

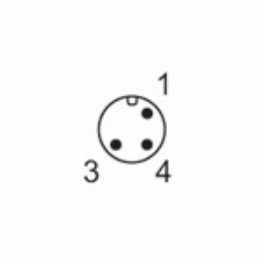

Connection



4: OUT / IO-Link