RAFIX 22 QR, keylock switch, round collar, frontring light gray, 1 x 90°, shape L, latching, key removal position 0



fields of application

- Measurement-control-regulation
- Electrical engineering
- Mechanical and system engineering
- Vehicle construction

special features

- Key-operated switches with various rotation angles and key removal positions.
- For key switches with three switch positions (e.g. 2 x 90 degrees with neutral position), the left or right switch element is actuated depending on the direction of rotation.
- Design adaptations through different front ring colors
- Firmly injection-molded collar seal, cannot twist or be lost during installation.
- 1-person mounting: the element is clamped by the seal in the mounting hole and can then be screwed from behind.
- Robust - suitable also for operation with gloves
- Degree of protection: IP 65 at the front
- Additional protection against twisting due to threaded ring with claw
- Installation diameter 22.3 mm
- Separate switching elements required
- Close mounting of actuators possible (min. 30 x 50 mm), as wiring is axial from behind
- Switching elements with silver contacts (max. 400 V) or gold contacts (max. 35 V / 100 mA)
- Connection types switching elements: cage clamp, screw connection or plug-in connection

The information in this data sheet only contains general descriptions and / or performance features, which may not apply precisely as described to the respective application, and which my change due to further product enhancements. The technical data, illustrations and other information about our products are the mere results of individual technical testing. These descriptions and other product features are only binding if they expressly agreed upon at the time of the conclusion of a binding contract. In all other cases, we reserve the right to make technical changes as well as changes of availability. Pictures and other graphic illustrations are approximations only. All product names may be trademarks or brand names of the RAFI Group or any other sub-supplier of RAFI. The use of such by any third parties for their own purposes may infringe the rights of the respective entity holding those rights.

RAFI GmbH & Co. KG

Ravensburger Str. 128-134
88276 Berg / Ravensburg
Germany
www.rafi-group.com,
info.headquarters@rafi-group.com

description

RAFIX control units are modular units consisting of several parts. In the RAFIX 22 QR family, they always consist of an actuating element, coupling and switching element. Then this unit is snapped onto the key switch. To release, a bayonet lever must be actuated.

RAFIX 22QR key switches have the specified tactility and function only when assembled with the appropriate switching elements. You can choose between two collar shapes: round and square. The mounting diameter is 22.3 mm according to the standard. The anti-rotation lug can be easily removed with a screwdriver if necessary.

The locking systems we use were created according to the DIN EN 1303 standard by well-known lock manufacturers. They are open, mechanical systems which, depending on the environmental conditions, require occasional maintenance by the machine or system operator.

technical data

general

Scope of delivery	2 keys
Front ring color	light gray
Collar shape	round
Operating temperature, min.	-25 °C
Operating temperature, max.	70 °C
Storage temperature, min.	-40 °C
Storage temperature, max.	80 °C
illuminated	No
Packaging	Box
Packaging unit	2 pcs.
net weight	42.5 g
Operating life	50,000 cycles
B10	65,000 cycles
Degree of protection, front side, according to DIN EN 60529	IP65
Environment resistance	IEC 60068-2-14 IEC 60068-2-30 IEC 60068-2-33 IEC 60068-2-78
Protection class	II
MOQ order	10 pcs.
RoHS compliant	Yes
REACH compliant	Yes

mounting diameters

Outside dimension, length	29.8 mm
Outside dimension, width	29.8 mm
Outside dimension, height	53.5 mm
Mounting hole	22.3 mm
Mounting depth	56.4 mm

direct links

RAFI eCatalog

The information in this data sheet only contains general descriptions and / or performance features, which may not apply precisely as described to the respective application, and which my change due to further product enhancements. The technical data, illustrations and other information about our products are the mere results of individual technical testing. These descriptions and other product features are only binding if they expressly agreed upon at the time of the conclusion of a binding contract. In all other cases, we reserve the right to make technical changes as well as changes of availability. Pictures and other graphic illustrations are approximations only. All product names may be trademarks or brand names of the RAFI Group or any other sub-supplier of RAFI. The use of such by any third parties for their own purposes may infringe the rights of the respective entity holding those rights.

RAFI GmbH & Co. KG

Ravensburger Str. 128-134
88276 Berg / Ravensburg
Germany
www.rafi-group.com,
info.headquarters@rafi-group.com

Installation height	30.6 mm
Grid, min.	50 x 30 mm
Collar dimension	ø 29,8 mm

mechanical data

Actuation function	latching
Operating torque, max.	2 Nm
Locking position	455
Key lock	Ronis
Key removal position	0
Rotating angle	1 x 90°, shape L
Fixing	Threaded ring
Threaded ring torque, max.	1.2 Nm

The information in this data sheet only contains general descriptions and / or performance features, which may not apply precisely as described to the respective application, and which my change due to further product enhancements. The technical data, illustrations and other information about our products are the mere results of individual technical testing. These descriptions and other product features are only binding if they expressly agreed upon at the time of the conclusion of a binding contract. In all other cases, we reserve the right to make technical changes as well as changes of availability. Pictures and other graphic illustrations are approximations only. All product names may be trademarks or brand names of the RAFI Group or any other sub-supplier of RAFI. The use of such by any third parties for their own purposes may infringe the rights of the respective entity holding those rights.

RAFI GmbH & Co. KG

Ravensburger Str. 128-134
88276 Berg / Ravensburg
Germany
www.rafi-group.com,
info.headquarters@rafi-group.com

drawings

Dimensioned drawing

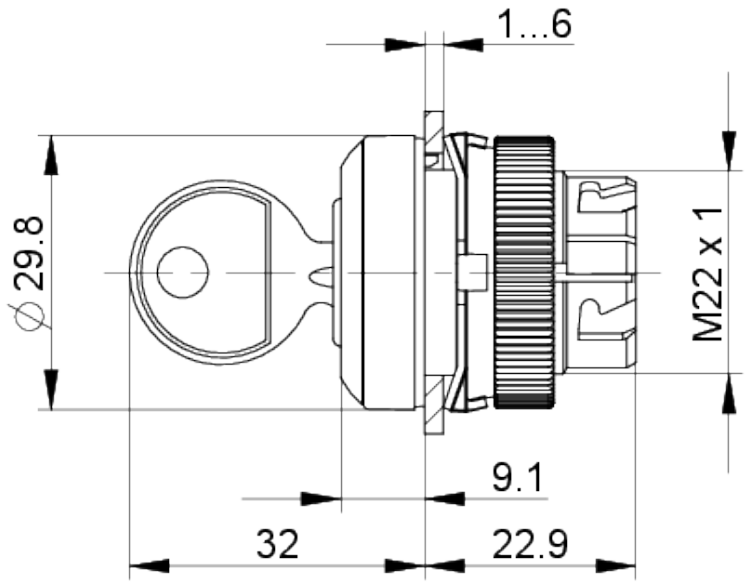

System drawing

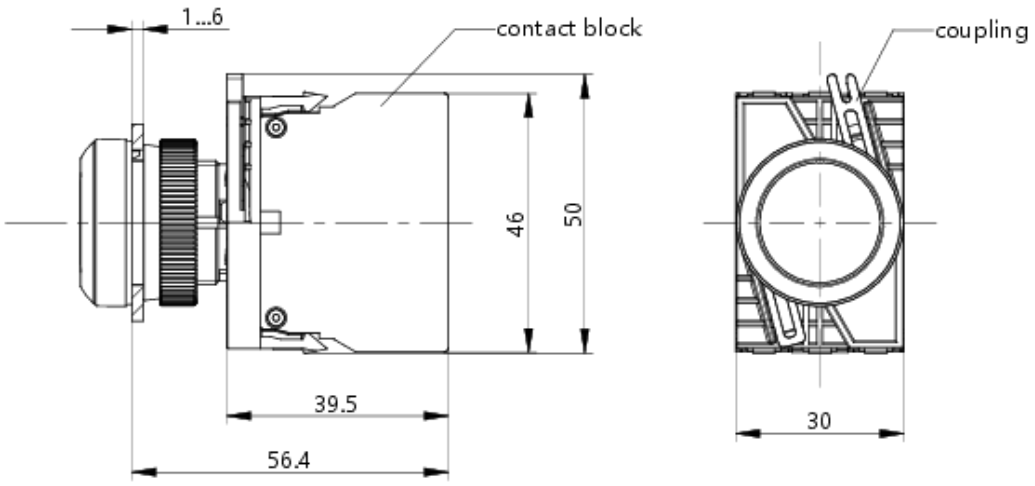

The information in this data sheet only contains general descriptions and / or performance features, which may not apply precisely as described to the respective application, and which my change due to further product enhancements. The technical data, illustrations and other information about our products are the mere results of individual technical testing. These descriptions and other product features are only binding if they expressly agreed upon at the time of the conclusion of a binding contract. In all other cases, we reserve the right to make technical changes as well as changes of availability. Pictures and other graphic illustrations are approximations only. All product names may be trademarks or brand names of the RAFI Group or any other sub-supplier of RAFI. The use of such by any third parties for their own purposes may infringe the rights of the respective entity holding those rights.

RAFI GmbH & Co. KG

Ravensburger Str. 128-134
88276 Berg / Ravensburg
Germany
www.rafi-group.com,
info.headquarters@rafi-group.com

1.30.245.201/0800

front panel drawing

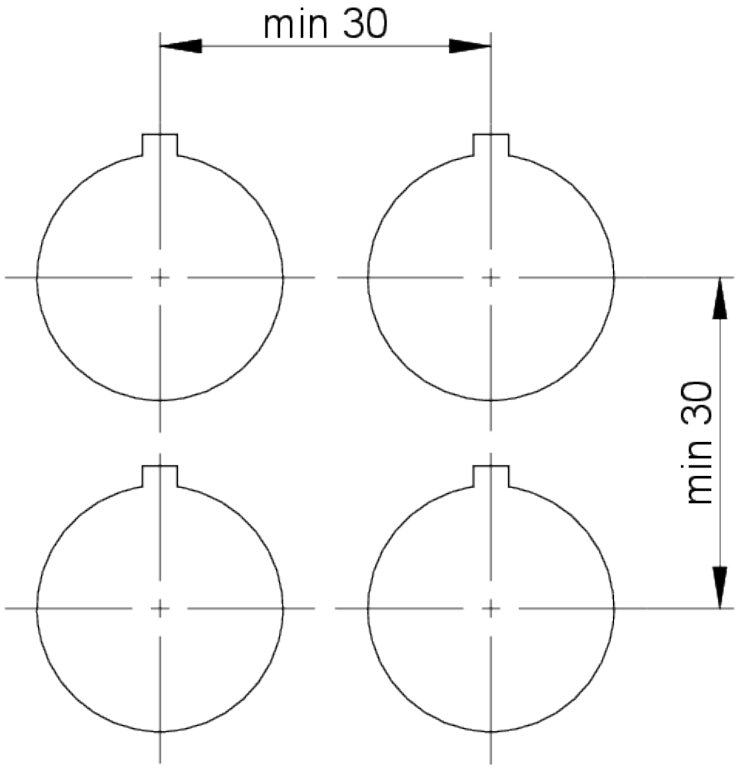

The information in this data sheet only contains general descriptions and / or performance features, which may not apply precisely as described to the respective application, and which my change due to further product enhancements. The technical data, illustrations and other information about our products are the mere results of individual technical testing. These descriptions and other product features are only binding if they expressly agreed upon at the time of the conclusion of a binding contract. In all other cases, we reserve the right to make technical changes as well as changes of availability. Pictures and other graphic illustrations are approximations only. All product names may be trademarks or brand names of the RAFI Group or any other sub-supplier of RAFI. The use of such by any third parties for their own purposes may infringe the rights of the respective entity holding those rights.

RAFI GmbH & Co. KG

Ravensburger Str. 128-134
88276 Berg / Ravensburg
Germany
www.rafi-group.com,
info.headquarters@rafi-group.com