PT5003

Pressure transmitter

PT-025-SEG14-A-ZVG/VE

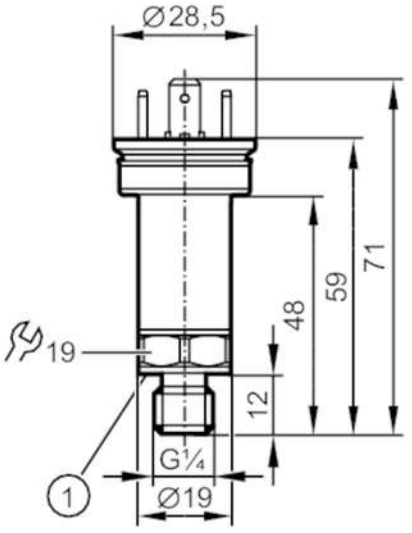

1 Sealing

Product characteristics			
Number of inputs and outputs	Number of analogue outputs: 1		
Measuring range	0...25 bar	0...360 psi	0...2.5 MPa
Process connection	threaded connection G 1/4 external thread (DIN EN ISO 1179-2)		
Application			
Measuring element	metallic thin film cell		
Application	for mobile applications; for industrial applications		
Media	liquids and gases		
Medium temperature [°C]	-40...125		
Min. bursting pressure	600 bar	8700 psi	60 MPa
Pressure rating	65 bar	940 psi	6.5 MPa
Note on pressure rating	static		
Vacuum resistance	-1000 mbar	-0.1 MPa	
Type of pressure	relative pressure		
Electrical data			
Operating voltage [V]	8...36 DC		
Min. insulation resistance [MΩ]	100; (500 V DC)		
Protection class	III		
Reverse polarity protection	yes		
Power-on delay time [s]	< 0.1		
Inputs / outputs			
Number of inputs and outputs	Number of analogue outputs: 1		
Outputs			
Total number of outputs	1		
Output signal	analogue signal		
Number of analogue outputs	1		

PT5003

Pressure transmitter

PT-025-SEG14-A-ZVG/VE

Analogue current output	[mA]	4...20		
Max. load	[Ω]	(Ub - 8 V) / 21,5 mA ; @8V= 0 Ω ; @12V max. 200 Ω: @24V max. 750 Ω		
Short-circuit proof		yes		
Overload protection		yes		
Measuring/setting range				
Measuring range		0...25 bar	0...360 psi	0...2.5 MPa
Accuracy / deviations				
Repeatability	[% of the span]	< ± 0,05; (with temperature fluctuations < 10 K)		
Characteristics deviation	[% of the span]	< ± 0,5; (incl. drift when overtightened, zero point and span error, non-linearity, hysteresis)		
Linearity deviation	[% of the span]	< ± 0,1 (BFSL) / < ± 0,2 (LS)		
Hysteresis deviation	[% of the span]	< ± 0,2		
Long-term stability	[% of the span]	< ± 0,1; (per 6 months)		
Temperature coefficient zero point	[% of the span / 10 K]	< ± 0,1 (0...80 °C); < ± 0,2 (-40...0 °C / 80...125 °C)		
Temperature coefficient span	[% of the span / 10 K]	< ± 0,1 (0...80 °C); < ± 0,2 (-40...0 °C / 80...125 °C)		
Response times				
Step response time analogue output	[ms]	2		
Operating conditions				
Ambient temperature	[°C]	-40...100		
Storage temperature	[°C]	-40...100		
Protection		IP 67		
Tests / approvals				
EMC		Compliant with ECE R 10, rev. 5	(E1 compliant)	
		DIN EN ISO 13766-1 : 2018	earthworks and construction machines	
		DIN EN ISO 14982 : 2009	agricultural and forestry machines	
		ISO 11452-2	100 V/m	
		ISO 7637-2 : 2011 pulse 1	Test severity III. function state C	
		ISO 7637-2 : 2011 pulse 2b	test severity IV. function state C	
		DIN EN 61326-1		
Shock resistance		DIN EN 60068-2-27	500 g (1 ms)	
Vibration resistance		DIN EN 60068-2-6	20 g (10...2000 Hz)	
MTTF	[years]	715		
UL approval		UL Approval no.	J032	
		File number UL	E174189	
Pressure Equipment Directive		Sound engineering practice; can be used for group 2 fluids; group 1 fluids on request		
Mechanical data				
Weight	[g]	67		
Housing		cylindrical		
Dimensions	[mm]	Ø 19 / L = 71		

PT5003

Pressure transmitter

PT-025-SEG14-A-ZVG/VE

Materials		stainless steel (630/1.4542/17-4 PH); stainless steel (316L/1.4404); PPS
Materials (wetted parts)		stainless steel (630/1.4542/17-4 PH); stainless steel (303/1.4305)
Min. pressure cycles		60 million; (at 1.2 times nominal pressure)
Tightening torque	[Nm]	25...35; (recommended tightening torque; depends on lubrication, seal and pressure rating)
Process connection		threaded connection G 1/4 external thread (DIN EN ISO 1179-2)
Process connection sealing		FKM (DIN EN ISO 1179-2)
Restrictor element integrated		yes

Remarks

Remarks	BFSL = Best Fit Straight Line
	LS = limit value setting
Pack quantity	1 pcs.

Electrical connection

Connector: 1 x valve plug type A DIN (EN175301-803-A)



Connection

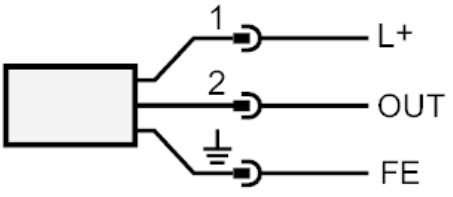

OUT	analogue output
FE	functional earth

PT5003

Pressure transmitter

PT-025-SEG14-A-ZVG/VE

Diagrams and graphs

characteristic load curve of current output

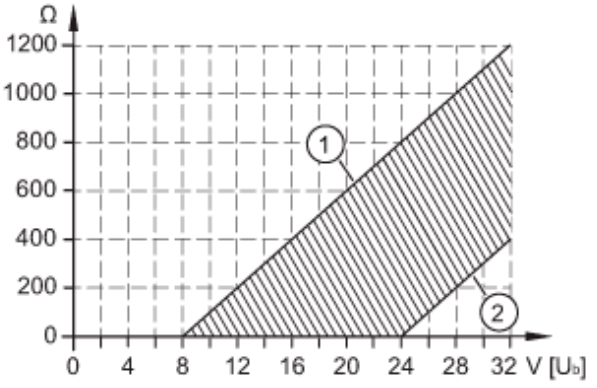

1: Max. load

2: min. load