PT2494

Pressure transmitter

PT-020PSEN14-A-ZVG/US/ /W

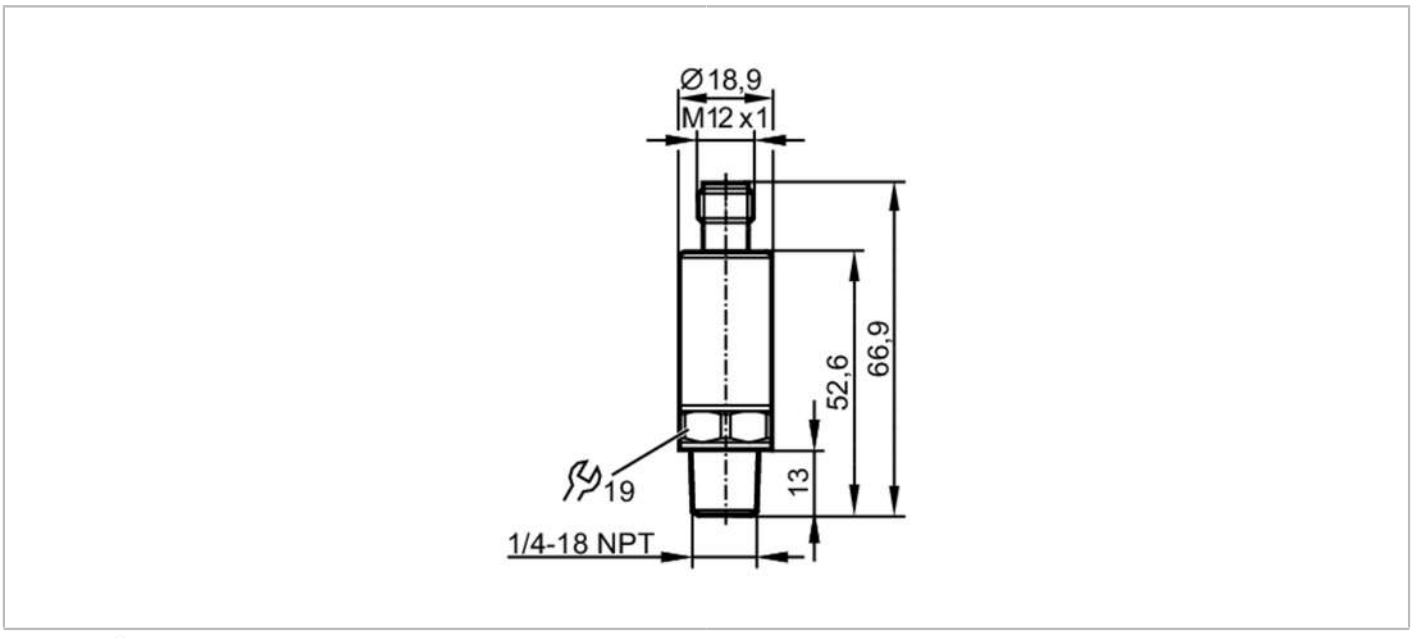

Product characteristics		
Number of inputs and outputs		Number of analogue outputs: 1
Measuring range	[psi]	-14.5...200
Process connection		threaded connection 1/4" NPT external thread
Application		
Application		for industrial applications
Media		liquids and gases
Medium temperature	[°C]	-40...90
Min. bursting pressure	[psi]	6525
Pressure rating	[psi]	580
Note on pressure rating		static
Vacuum resistance	[psi]	-14.5
Type of pressure		relative pressure
MAWP (for applications according to CRN)	[psi]	580
Electrical data		
Operating voltage	[V]	8.5...36 DC
Min. insulation resistance	[MΩ]	100; (500 V DC)
Protection class		III
Reverse polarity protection		yes
Power-on delay time	[s]	< 0.1
Inputs / outputs		
Number of inputs and outputs		Number of analogue outputs: 1
Outputs		
Total number of outputs		1
Output signal		analogue signal

PT2494

Pressure transmitter

PT-020PSEN14-A-ZVG/US/ /W

Number of analogue outputs		1
Analogue current output	[mA]	4...20
Max. load	[Ω]	(Ub – 8,5 V) / 21,5 mA; @8,5V= 0 Ω; @12V max. 160 Ω; @24V max. 720 Ω
Short-circuit proof		yes
Overload protection		yes
Measuring/setting range		
Measuring range	[psi]	-14.5...200
Accuracy / deviations		
Repeatability	[% of the span]	< ± 0,05; (with temperature fluctuations < 10 K)
Characteristics deviation	[% of the span]	< ± 0,5; (incl. drift when overtightened, zero point and span error, non-linearity, hysteresis)
Linearity deviation	[% of the span]	< ± 0,1 (BFSL) / < ± 0,2 (LS)
Hysteresis deviation	[% of the span]	< ± 0,2
Long-term stability	[% of the span]	< ± 0,1; (per 6 months)
Temperature coefficient zero point and span	[% of the span / 10 K]	< 0,1 (-25...90 °C) / < 0,2 (-40...-25 °C)
Response times		
Step response time analogue output	[ms]	1
Operating conditions		
Ambient temperature	[°C]	-40...90
Storage temperature	[°C]	-40...100
Protection		IP 67; IP 69K
Tests / approvals		
EMC		DIN EN 61000-6-2
		DIN EN 61000-6-3
Shock resistance		DIN EN 60068-2-27 — 50 g (11 ms)
Vibration resistance		DIN EN 60068-2-6 — 20 g (10...2000 Hz)
MTTF	[years]	787
UL approval		UL Approval no. — J027
Pressure Equipment Directive		Sound engineering practice; can be used for group 2 fluids; group 1 fluids on request
Mechanical data		
Weight	[g]	58
Housing		cylindrical
Dimensions	[mm]	Ø 18.9 / L = 66.9
Materials		stainless steel (630/1.4542/17-4 PH); stainless steel (316L/1.4404); PEI
Materials (wetted parts)		stainless steel (630/1.4542/17-4 PH)
Min. pressure cycles		60 million; (at 1.2 times nominal pressure)
Tightening torque	[Nm]	< 50; (recommended tightening torque; depends on lubrication, seal and pressure rating)
Process connection		threaded connection 1/4" NPT external thread
Restrictor element integrated		no (can be retrofitted)

PT2494

Pressure transmitter

PT-020PSEN14-A-ZVG/US/ /W

Remarks	
Remarks	BFSL = Best Fit Straight Line
	LS = limit value setting
Pack quantity	1 pcs.

Electrical connection

Connector: 1 x M12; coding: A



Connection

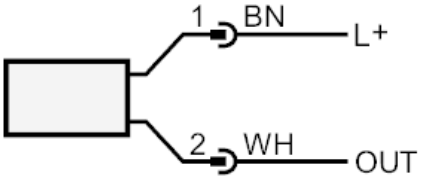

OUT	analogue output
	colours to DIN EN 60947-5-2
	Core colours :
BN =	brown
WH =	white