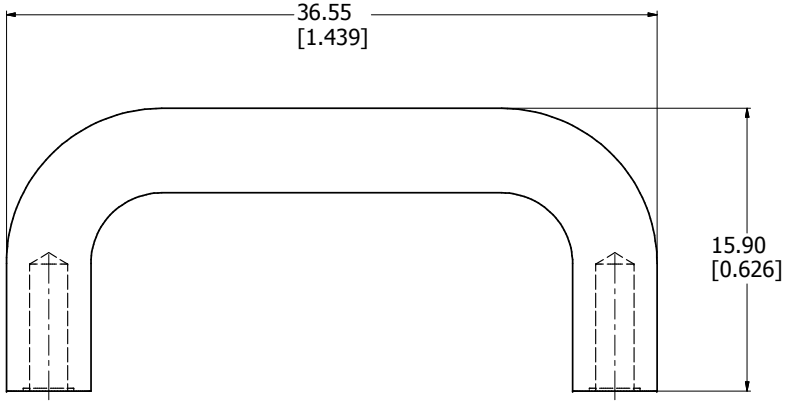

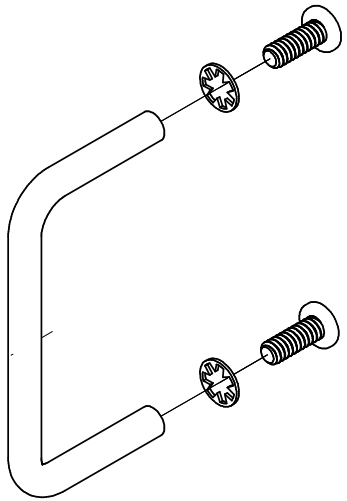

TYPICAL HANDLE ASSEMBLY

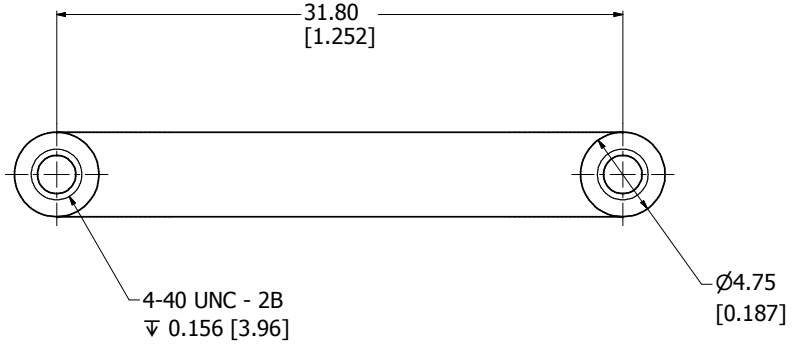

1427B
Handle Material - CR Steel
Finish - Bright Crome Plated
Hardware
2 Screws - Panhead 4-40 x 1/4"
2 Internal Tooth Lockwashers
**note handle sold as single

HAMMOND MANUFACTURING™

1427B