KG series

Power rocker switches



DISTINCTIVE FEATURES

Protected rocker
Illuminated or non-illuminated
Sealed to IP65



ENVIRONMENTAL SPECIFICATIONS

- Degree of protection : IP65 according to IEC 60529
- Shock resistance : 100 g according to IEC 512-4, test 6c
- Vibration resistance : 10-500 Hz - 10 g according to IEC 512-4, test 6d
- Salt spray resistance : 96 hours according to IEC 512-6, test 11f
- Operating temperature :
  2 position models : -40 °C to + 85 °C (-40 °F to +185 °F)
  3 position models : -10 °C to + 65 °C (-14 °F to +149 °F)

ELECTRICAL AND GENERAL SPECIFICATIONS

- Currrent/voltage rating :
  - functions 1 (ON-OFF) and 6 (ON-ON) : 15 A 12 VDC, 10 A 24 VDC max., 10 mA 14 VDC min.
  - functions 4 (ON ON ON) and 4-1R (ON ON MOM) : 8 A 12 VDC, 5 A 24 VDC max.
  - other functions : 10 A 12 VDC, 8 A 24 VDC max.
- Initial contact resistance : 10 mΩ max. at 1 A 2 VDC
- Insulation resistance : 1,000 MΩ min. at 500 VDC
- Dielectric strength : 2,000 Vrms 50 Hz min. between terminals
- Electrical life : 10,000 cycles min.
- Mechanical life : 2 position models : 100,000 cycles min.
  3 position models : 30,000 cycles min.
- Panel cut-out : 36.80 x 21.08 mm (1.149 x .830)
- Panel thickness : 0.8 mm to 4.6 mm
- Recommended thickness : between 2 mm and 3.5 mm

The company reserves the right to change specifications without notice.

KG series

Power rocker switches

MATERIALS

- Case : thermoplastic UL94-V0
- Terminals : brass, silver plated
- Contacts : silver grain
- Contact roller : brass, nickel plated

ELECTRICAL FUNCTIONS

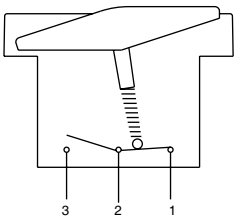

PANEL CUT-OUT

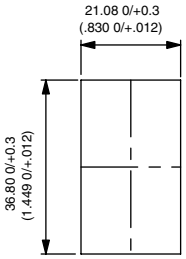

MATRIX MOUNTING

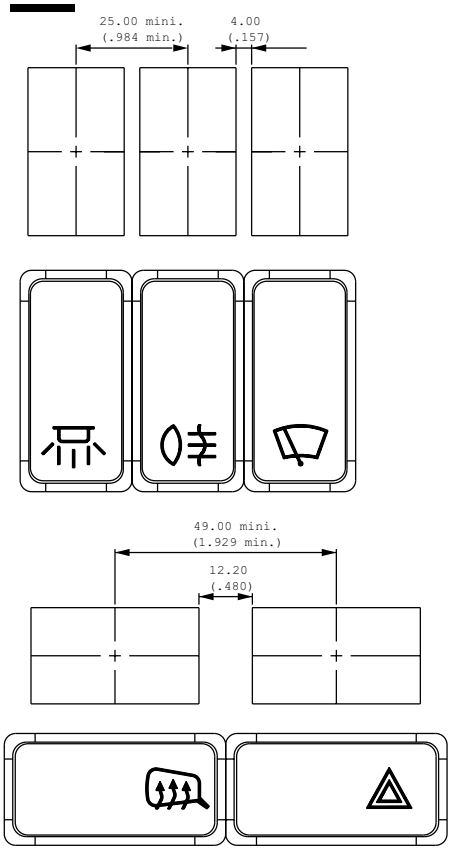

TERMINALS

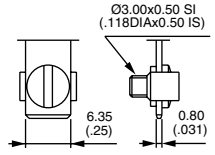

Screw

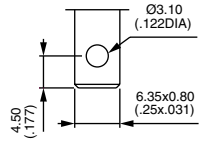

Solder lug / quick-connect

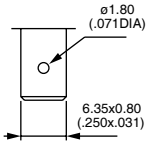

Normalized quick-connect 6.35x0.8

KG series

Power rocker switches

BUILD YOUR PART NUMBER

CASE + LAMPS

KG | ____ | ____ | ____ | ____ | ____ | Side A | Side B | ____

SERIES

POLES

3	Single pole
4	Double pole

ELECTRICAL FUNCTIONS

1	ON	-	OFF
4	ON	ON	ON
4-1R	ON	ON	MOM
5	MOM	-	ON
6	ON	-	ON
7	MOM	OFF	MOM
8	ON	OFF	MOM
9	ON	OFF	ON

TERMINALS

0	Screw
2	Solder lug / quick- connect
3	Normalized quick-connect

CONTACTS

A	Silver grain

BEZEL

2	Black, sealed to IP65

LAMPS

LED 6 V, 12 V, 18 V

Filament 6 V, 12 V, 24 V

Codes, see website.

LAMP WIRING

See following pages.

ACTUATOR

____ | ____ | Side A | Side B

ROCKER COLOR

1	Blue	5	Yellow
1/4	Dark blue	6	Red
2	Black	7	Ivory
3	Green	9	Orange
4	Grey		

ROCKER SHAPE

Full rocker, opening on one side or on two sides : see following pages.

LENS COLOR

X	No lens	9	Orange
1	Blue*	B	White
3	Green*	T	Translucent
6	Red		

*Blue or green lens recommended with fluorescent lamp.

Actuator marking and symbols : see end of the series.

ABOUT THIS SERIES

Notice : please note that not all combinations of above numbers are available. Refer to the following pages for further information.

Sealing boot are available to protect the switches against dust and water. See "Sealing Boots" section of website.

KG series

Power rocker switches

SOLDER LUG / QUICK-CONNECT TERMINALS



Single pole	Double pole	2-3 5-6		1-2 4-5
KG31	KG41	ON	-	OFF
	KG44*	ON	ON	ON
	KG44-1R*	ON	ON	MOM
KG35	KG45	MOM	-	ON
KG36	KG46	ON	-	ON
KG37	KG47	MOM	OFF	MOM
KG38	KG48	ON	OFF	MOM
KG39	KG49	ON	OFF	ON

* Function 4 : single pole in double pole case

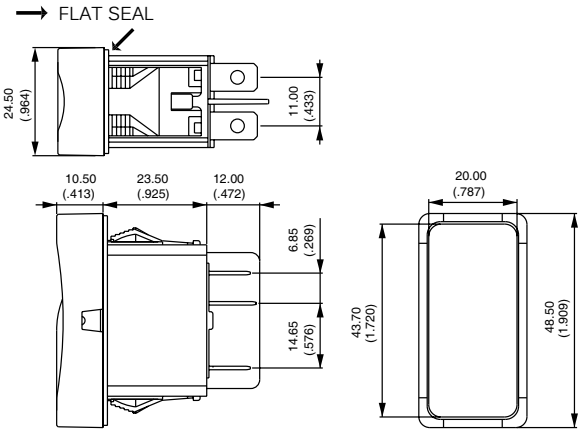

CASE + LAMPS

TERMINALS

BASIC P/N ..... ACTUATOR

0 Screw
2 Solder lug / quick-connect
3 Normalized quick-connect

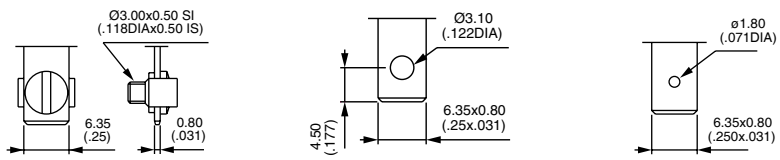

0 2 3

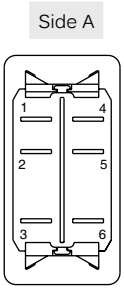

Terminals 1 to 6 are marked on the case.
Side A : terminals 1 and 4
Side B : terminals 3 and 6

CASE + LAMPS

CONTACT MATERIALS

BASIC P/N ..... ACTUATOR

A Silver grain

CASE + LAMPS

BEZEL

BASIC P/N ..... ACTUATOR

2 Black, sealed to IP65

KG series

Power rocker switches

CASE + LAMPS

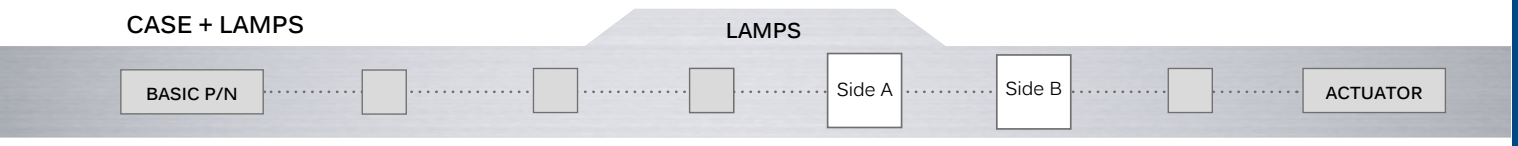

Complete each enlarged box with one of the codes listed below.

X	Without LED
O	Filament 6 V
P	Filament 12 V
R	Filament 24 V

	Red	Green	Yellow	Blue	White
6 VDC	**A**	**B**	**C**	**1**	**W**
12 VDC	**D**	**E**	**F**	**Z**	**V**
18 VDC	**G**	**H**	**I**	-	-
24 VDC	**J**	**K**	**L**	**Y**	**U**

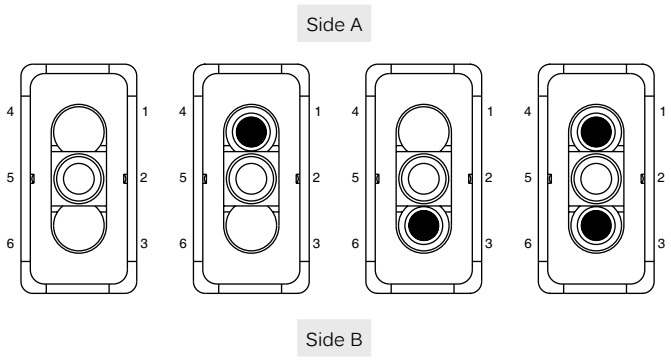

CASE + LAMPS

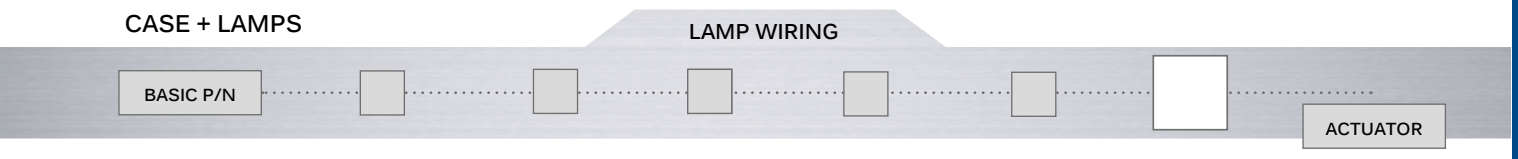

The lamp wiring diagram is shown on the case.
To order case only (without rocker), finish your order number with the lamp wiring code.

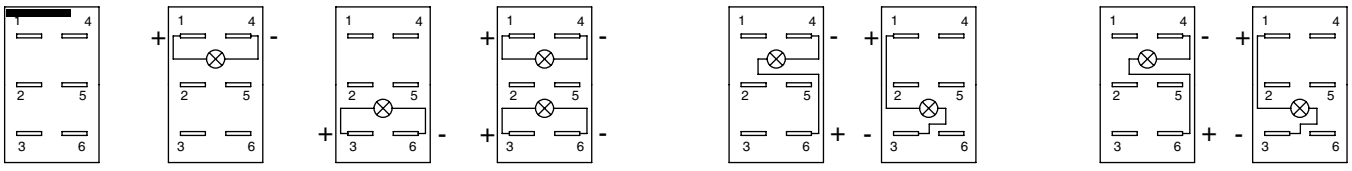

A standard

B

C

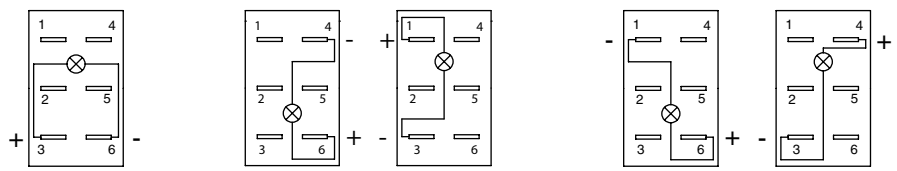

D *

E

F

* For function 1 (on-off) with LED on side A

Note : If not available, terminals are added to connect the LED.

KG series

Power rocker switches

ACTUATOR		ROCKER COLOR						
BASIC P/N	CASE + LAMPS							

To order rocker only (without case), begin the order number with code KGR, then follow the order format from "rocker color" until the end of the options.

1	Blue	5	Yellow
1/4	Dark blue	6	Red
2	Black	7	Ivory
3	Green	9	Orange
4	Grey		

ACTUATOR		ROCKER SHAPE						
BASIC P/N	CASE + LAMPS							

1	Full rocker
4	Opening on side A
6	Opening on side B
8	Opening on sides A and B

Other rocker shapes on customer specifications : on request.



1



4



6



8

ACTUATOR		LENS COLOR						
BASIC P/N	CASE + LAMPS			Side A	Side B			

To order lenses only, begin the order number with the codes : KGLA for lens A and KGLB for lens B, then follow the order format from "lens color" until the end of the options.

Complete each enlarged box with one of the codes listed below.

X	No lens
1	Blue *
3	Green *
6	Red
9	Orange
B	White
T	Translucent



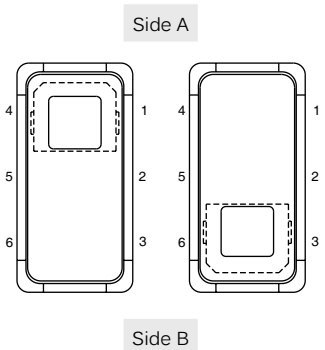

* Blue or green lens recommended with fluorescent lamp.

KG series

Power rocker switches

ACTUATOR **MARKING**

BASIC P/N · CASE + LAMPS · · ·

K range

Power rocker switches and indicators • symbols and accessories



Most symbols meet the ISO 7000 standard “graphical symbols for use on equipment” (code given in bracket in the description).

Contact us for symbols not featured in the following tables.

CODE	SYMBOL	DESCRIPTION
XX	None	-
01	ON	-
02	OFF	-
03	O	-
04	I	-
05	II	-
06	STOP	-
07	A	Stop
08	M	Motion
09		Up motion
10		Down motion
11		Hot
12		Cold
13		Hazard warning (0085)
14		Traveller lighting
15		Driver lighting (1421)

CODE	SYMBOL	DESCRIPTION
16		Revolving light
17		Rear ventilator
18		Heating (0637)
19		Door opening
20		Windshield demister/ defroster (0635)
21		Windshield wiper (0086)
22		Windshield washer (0088)
23		Ventilator fan (0089)
24		Side mirror defroster
25		Restarting pump
26		Front fog lights (0633)
27		Rear fog lights (0634)
28		Propulsion system trim
29		Beacon (1141)
30		Anchor
31		Electric motor (0011)

CODE	SYMBOL	DESCRIPTION
32		Emergency first aid vehicle (2565)
33		Load tipping (1557)
34		Loading light (2457)
35		Tractor, rear-ward (1667)
36		Combine, direction of movement (1678)
37		Use no forks (2406)
38		Transmission (1166)
39		Working spot light (1145)
40		Engine (0640)
41		Horn (0244)
42		Lock (1656)
43	TAXI	Taxi sign light (2551)
44		Working light (1204)
45		Working light symmetric (1204)
46		-
47	ASM	-

The company reserves the right to change specifications without notice.

K range

Power rocker switches and indicators • symbols and accessories

CODE	SYMBOL	DESCRIPTION
48		All wheel drive
49		Differential lock (1662)
50		-
51		-
52		-
53	N	-
54		Rear window wiper (0097)
55		Rear window washer (0099)
56		Lower load (2223)
57		Cab lock (1560)
58		Extraction
59		Pumping in
60		Rear PTO (1572)
61		Front PTO
62		Rockshaft down
63		Rockshaft up
64		Indicator
65		Brake release
66		Baggage room left door
67		Baggage room right door
68		Power blinds

CODE	SYMBOL	DESCRIPTION
69		Engine idle control
70	CRUISE RES/SET	Cruise res/set
71		Driver windows up/ down
72		Middle door opening
73		Front door opening
74		Lighting in baggage room
75	CRUISE ON/OFF	Cruise on/off
76	TV	TV
77		Pump
78	WC	Toilet
79	WC	Toilet decontamination
80		Front windshield heating
81	AUS	Aus
82		Radiator fan
83		Remove retarder
84		Restricted speed
85		Preheater
86		ABS detection
87		ECAS detection
88		Engine stop
89	CRUISE RES/CAN	Cruise res/cancel

CODE	SYMBOL	DESCRIPTION
90		ECAS reset
91		Driver windows heating
92	CRUISE SET+/SET-	Cruise set
93		Air bag up/down
94		Read lighting
95		Lighting main switch
96		Heating using water
97		Low beam
98		Position lights
99		Diesel acceleration
A1		Manual mode
A2		Clockwise cabin rotation
A3		Anticlockwise cabin rotation
A4		-
A5		-
A6		Parking brake
A7		-
A8		-
A9		-
AA		-
AB		-

K range

Power rocker switches and indicators • symbols and accessories

CODE	SYMBOL	DESCRIPTION
AC		-
AD		-
AE		-
AF		-
AG		Battery charging condition (0247)
AH		Turn signals (0084)
AJ		High beam (0082)
AK		Differential lock, bogie (2600)
AL		Brushing with a rotating brush (0070)
AM		Differential lock, transfer case 4x4 (2475)
AN		Loader bucket, float (1441)
AP		Loader bucket (1437)
AQ		Rear window washer & wiper (0098)
AR		Header, Header drive (1579)
AS		Excavator/backhoe boom side shift (2091)
AT		Chemical water treatment (1851)
AU		Grapple skidder, single funct° boom (1762)

CODE	SYMBOL	DESCRIPTION
AV		-
AW		-
AY		-
AZ		-
B1	HIGH	-
B2	LOW	-
B3		-

Legend scale

Depending on space available on the product (see “Symbols” section at the end of each series).

K range

Power rocker switches and indicators • symbols and accessories

MOUNTING PANELS

(NOT SUITABLE FOR USE WITH THE KH SERIES)

MOUNTING PANEL END



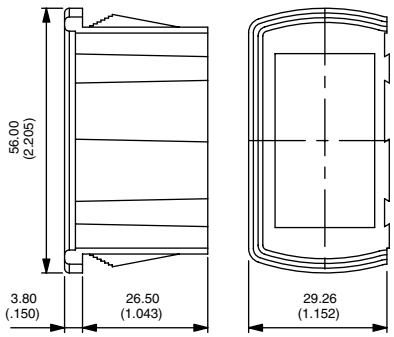

U2261

MOUNTING PANEL MIDDLE



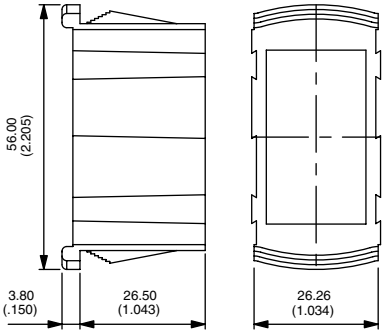

U2262

SINGLE MOUNTING PANEL



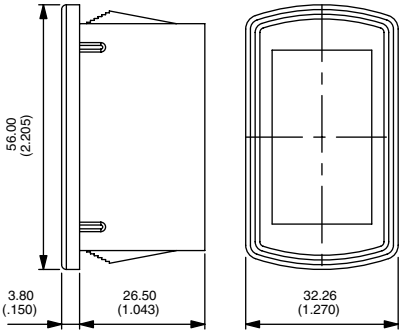

U2267

Recommended panel thickness : 1.10 mm - 1.80 mm - 2.60 mm - 3.40 mm - 4.20 mm - 5 mm - 5.80 mm

MOUNTING PANEL CUT-OUT

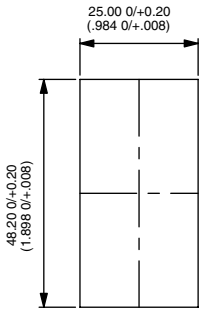

For 1 element U2267

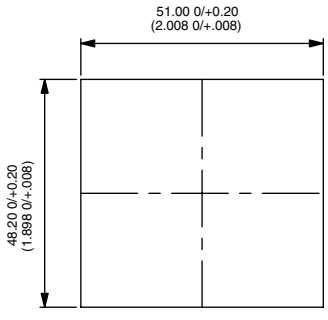

For 2 elements U2261

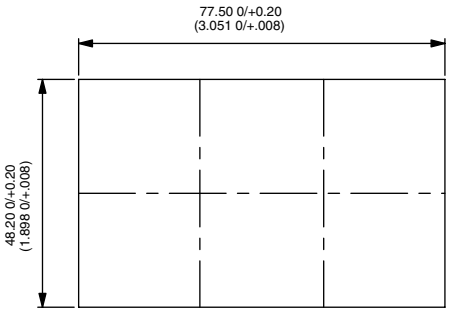

For 3 elements (2xU2261 + 1x U2262)

For additional elements, add 26.40 mm (1.039)

K range

Power rocker switches and indicators • symbols and accessories

22 X 44 ADAPTERS

(NOT SUITABLE FOR USE WITH THE KH SERIES)

FRONT PANEL DISMOUNTING

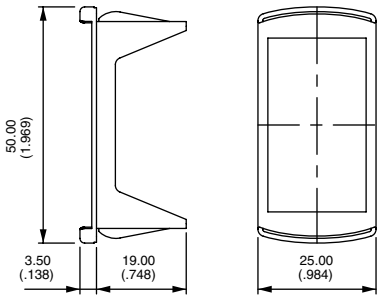

U3060

REAR PANEL DISMOUNTING

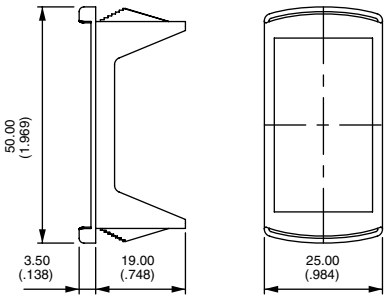

U3070

PANEL CUT-OUT

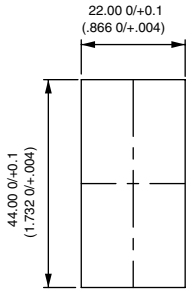

Recommended panel thickness
U3060 0.60 mm to 1.50 mm
U3070 1.60 mm -0.1/0 to 5.60 mm -0.1/0 in stages of 0.40 mm

Adapter colors (replace 0 with code)

1/4	Dark blue
2	Black
4	Grey
5	Yellow
6	Red
7/1	White

ACTUATOR REMOVING TOOL

(NOT SUITABLE FOR USE WITH KH1 MODELS - 4-SIDE PROTECTION GUARDS)

Extract actuator (KR only)
Allows the extraction of the rocker / rocker support assembly. Place the 2 claws under the support and push as indicated by the arrow.

Extract rocker (KR only)
Allows to separate the rocker from its support. Insert the tool between rocker and support as indicated by the arrrow. Pull out the tool in the opposite direction.

Extract switch (KR, KL and KI)
Allows to extract switch from panel mounting units. 2 Tools are necessary. Insert the tools between switch and panel mounting units from the rear to compress the snap-in device. Pull off switch manually.



U3052

to be ordered by pairs

BLANKING CAPS

Usefull for future extensions.
Connectors can be hanged on specific hole plugs. Contact APEM.

U2271	Blue	**U2275**	Yellow
U2271/4	Dark blue	**U2276**	Red
U2272	Black	**U2277**	Ivory
U2273	Green	**U2279**	Orange
U2274	Grey		



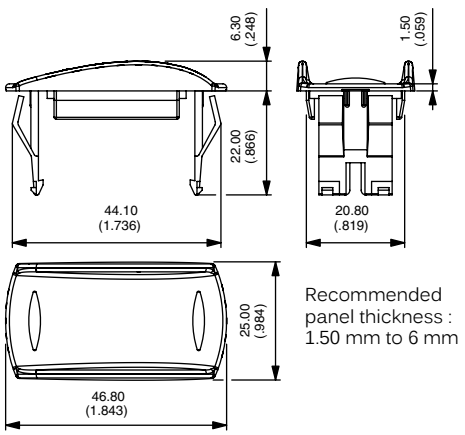

Recommended panel thickness : 1.50 mm to 6 mm

K range

Power rocker switches and indicators • symbols and accessories

CONNECTORS

Standard color : black. Other colors : on request. Connectors cannot be combined with wiring types H and I.

U2260 6 terminal version. For use with terminals type 2, 3, 4 or 5.
6.35 (1/4) tabs to be fitted by the user (example : TE42282-2).
Can be used for the KG series.

U2282 10 terminal version. For use with terminals type H or J.
2.8 (.110) tabs to be fitted by the user (example : AMP/Tyco 0-927779-3).

U2292 10 terminal version : For use with terminals type B, C, E or F.
6.35 (1/4) tabs to be fitted by the user (example : TE42282-2).

U3152 10 terminal version. For use with terminals type B, C, E or F.
6.35 (1/4) tabs to be fitted by the user (example : "Timer" terminals TE927833-2)

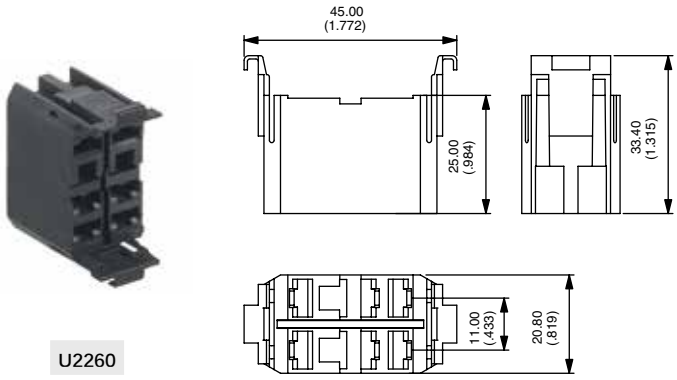

U2260

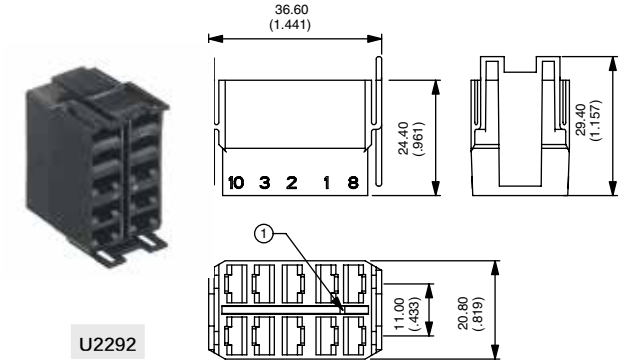

U2292

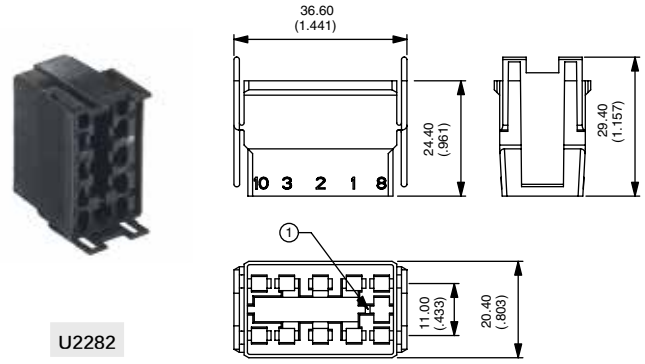

U2282

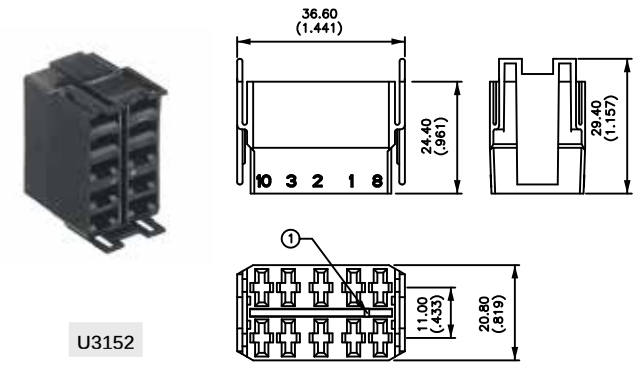

U3152