- **Port size: G1/4, 1/4 PTF**
- **Bonnet and body made from acetal plastic**
- **R91W: Use with deionize water and potable water systems. All elastomers are CFR 21 FDA food and water contact compliant. Non relieving models only.**
- **R91G: Designed for use with non-potable water and compressed air systems. Non relieving and relieving models.**
- **Low torque, non-rising adjusting knob.**
- **Snap action knob locks pressure setting when pushed down.**



Technical features

Medium:
R91G: Compressed air and non-potable water
R91W: Potable water, deionized water
Maximum inlet pressure:
10 bar (145 psi)
Pressure range:
0,3 ... 8,6 bar (4 ... 124 psi)
0,3 ... 3,5 bar (4 ... 50 psi)
Flow:
see below

Port sizes:
G1/4, 1/4 PTF
Gauge ports:
1/8 PTF with PTF main ports
R1/8 with ISO G main ports
Ambient/Media temperature:
Water service:
+2° ... +52°C (+35 ... 125°F)
Air service:
-20° ... +52°C (-4 ... 125°F)
When used in air service, air supply must be dry enough to avoid ice formation at temperatures below +2°C (+35°F).

Materials:
Body and bonnet: Acetal
Valve seat: Acetal
Gauge port plugs: PP
R91G:
Valve: brass/NBR
Valve seat o-ring: NBR
Diaphragm: Acetal/PA inserted NBR

R91W*:
Valve: Stainless steel/food grade EPDM
Valve seat o-ring: food grade EPDM
Diaphragm: Acetal/PA inserted NBR, food grade
* NSF/ANSI 61 approved materials

Technical data, standard models

Symbol	Port size	Application	Pressure range (bar)	Flow *1) (dm^3/s)	Flow *2) (lpm)	Relieving	Gauge	Weight (kg)	Model
	G1/4	Industrial air and non-potable water	0,3 ... 8,6	11	6,6	Without	Without	0,07	R91G-2GK-NLN
	G1/4	Potable water and deionized water	0,3 ... 8,6	11	6,6	Without	Without	0,07	R91W-2GK-NLN

*1) Approximate compressed air flow with 10 bar inlet pressure, 6,3 bar set pressure and a 1 bar droop from set.
*2) Approximate water flow with 7 bar inlet pressure, 4 bar set pressure and a 1 bar droop from set.

Option selector

R91★-2★K-★★★

Application	Substitute
Industrial air, non-potable water	G
Potable water, deionized water	W
Threads	**Substitute**
PTF	A
ISO Rc taper	B
ISO G parallel	G
Diaphragm	**Substitute**
Non relieving	N
Relieving (only R91G)	R

Gauge	Substitute
With	G *3)
Without	N
Pressure range *4)	**Substitute**
0,3 ... 3,5 bar	E
0,3 ... 8,6 bar	L

*3) Gauge with NSF approved materials not available.

*4) Outlet pressure can be adjusted to pressures in excess of, and less than, those specified. Do not use these units to control pressures outside of the specified ranges.

Our policy is one of continued research and development. We therefore reserve the right to amend, without notice, the specifications given in this document. (1997 - 8118f) © 2015 Norgren Ltd.

Air flow characteristics
Port size: 1/4", Spring range: 0,3 ... 8,6 bar, Inlet pressure: 10 bar

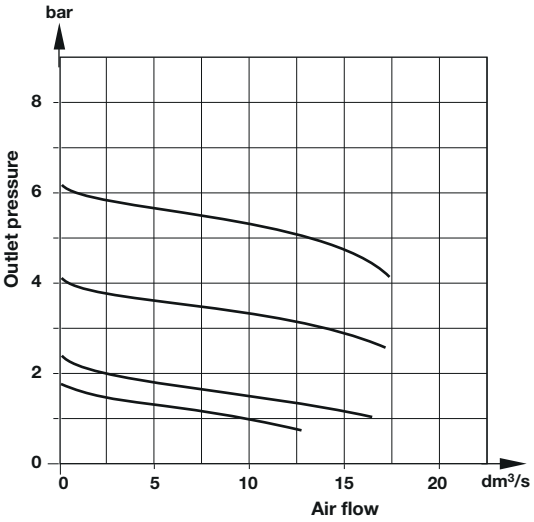

Water flow characteristics
Port size: 1/4", Spring range: 0,3 ... 3,5 bar, Inlet pressure: 7 bar

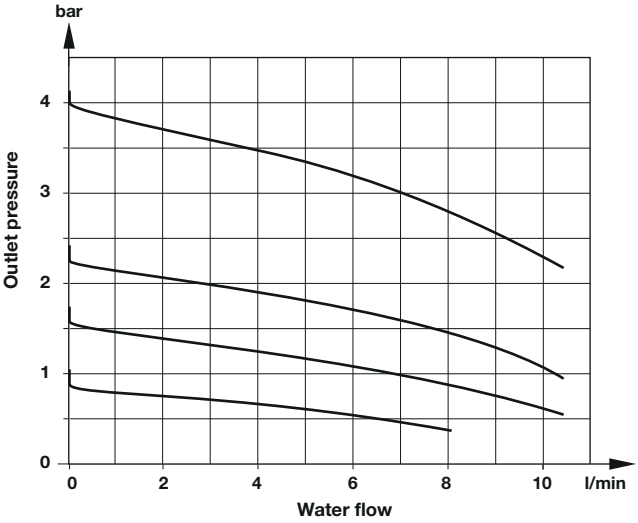

Accessories



Service kit



3407-93 (R91W, non-relieving)
3407-94 (R91G, non-relieving)
3407-95 (R91G, relieving)

Wall mounting bracket and panel nut	Panel nut	Tamper resistant field modification	Gauge ø 40 mm *1)
			
1 & 4	4	3	6
18-025-003 (with plastic nut)	2962-04 (Metal)	18-001-092	18-013-990 (0 ... 4 bar)
18-025-004 (with metal nut)	2962-89 (Plastic)		18-013-989 (0 ... 10 bar (145 psi))

*1) Gauge with NSF approved materials not available.

Our policy is one of continued research and development. We therefore reserve the right to amend, without notice, the specifications given in this document. (1997 - 8118f) © 2015 Norgren Ltd.

Dimensions

Bracket mounting

Dimensions in mm
Projection/First angle

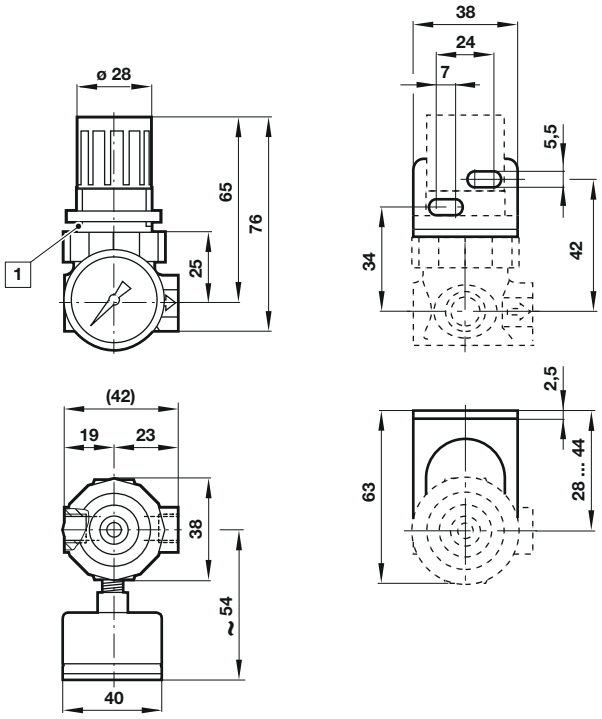

1 Panel mounting hole Ø 31 mm

Warning

These products are intended for use in industrial compressed air and water systems only. Do not use these products where pressures and temperatures can exceed those listed under »**Technical features/data**«. Before using these products with fluids other than those specified, for non-industrial applications, life-support systems or other applications not within published specifications, consult
IMI Precision Engineering, Norgren Ltd.

Through misuse, age, or malfunction, components used in fluid power systems can fail in various modes. The system designer is warned to consider the failure modes of all component parts used in fluid power systems and to provide adequate safeguards to prevent personal injury or damage to equipment in the event of such failure.
System designers must provide a warning to end users in the system instructional manual if protection against a failure mode cannot be adequately provided.
System designers and end users are cautioned to review specific warnings found in instruction sheets packed and shipped with these products.

Our policy is one of continued research and development. We therefore reserve the right to amend, without notice, the specifications given in this document. (1997 - 8118f) © 2015 Norgren Ltd.