E12788

Y-splitter

ZDO2E050MSS0000-00STGE050MSS

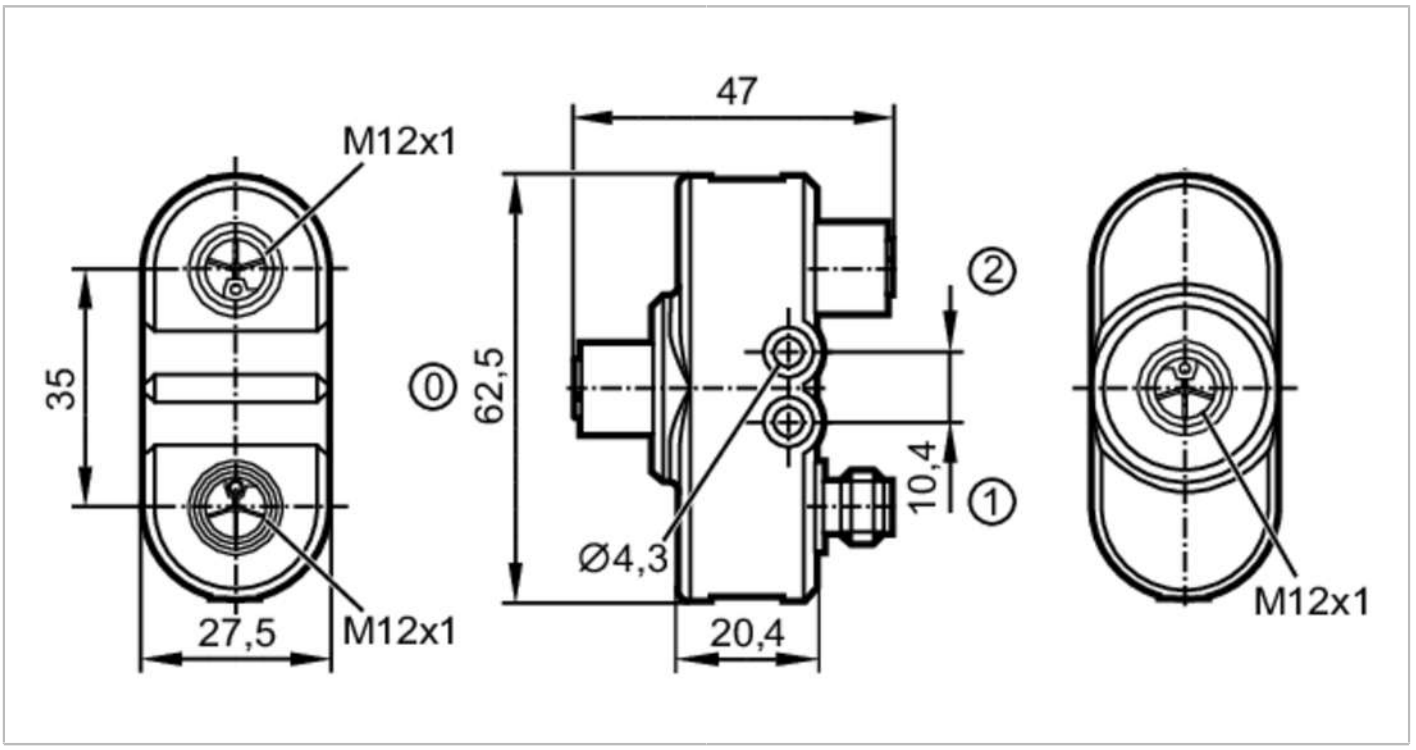

Application		
Special feature		Gold-plated contacts
Electrical data		
Operating voltage	[V]	< 63 DC
Protection class		III
Max. current load total	[A]	16; (40 °C)
Operating conditions		
Ambient temperature	[°C]	-40...85
Protection		IP 65
Mechanical data		
Weight	[g]	99.95
Moulded-body material		PBT
Material nut		brass, nickel-plated
Sealing material		HNBR
Accessories		
Items supplied		labels: 2
Remarks		
Pack quantity		1 pcs.

E12788

Y-splitter

ZDO2E050MSS0000-00STGE050MSS

Electrical connection - plug

Connector: 1 x M12; coding: L; Moulded body: PBT, black; Locking: brass, nickel-plated; Contacts: gold-plated



Connection

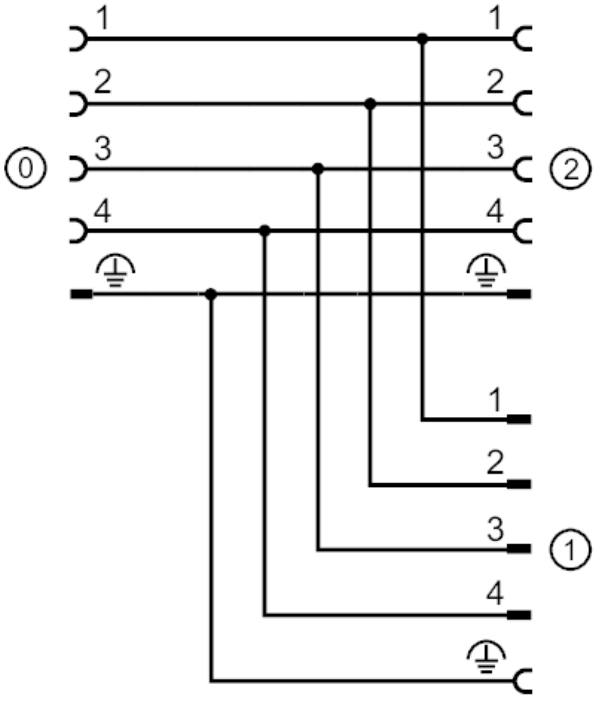

Electrical connection - socket

Connector: 2 x M12; coding: L; Moulded body: PBT, black; Locking: brass, nickel-plated; Sealing: HNBR; Contacts: gold-plated

