Product Data Sheet
00813-0200-7062, Rev AB
February 2023

Rosemount™ 1208C Level and Flow Transmitter

Non-Contacting Radar



- Cost-effective FMCW radar with 80 GHz technology
- Ideal for level measurement in small tanks and open air applications
- Volume flow measurement in open channels
- Maintenance free solution unaffected by process conditions such as density, viscosity, temperature, and pressure
- 4-20 mA HART® Revision 7 protocol

Introduction

Good fit for open air applications

Rosemount 1208C delivers reliable level measurements regardless of challenging weather conditions such as condensation, wind, sunlight, and changing temperature. The transmitter can also be used in open channel applications to determine the volume flow.

Figure 1: Bracket Mounting

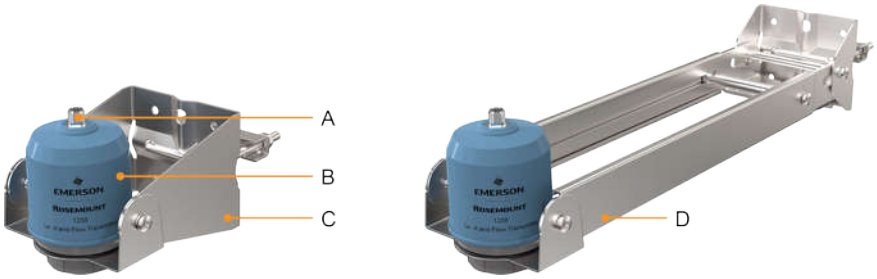

A. M12 connector for simple commissioning
B. PVDF housing
C. Standard bracket
D. Extendable bracket

Installation flexibility on tanks

The compact design of the transmitter allows it to be installed in tight spaces and small vessels, either by using a threaded flange or a threaded fitting.



Contents

Introduction 2
Ordering information 5
Performance specifications 7
Functional specifications 9
Physical specifications 12
Installation considerations 14
Product certifications 17
Dimensional drawings 18

Easy integration into control systems

Connect the Rosemount 1208C to your host system or visualize and control your process data by pairing with the Rosemount 3490 Controller. The control unit provides comprehensive control functionality for any of your 4–20 mA or HART compatible devices.

Related information

Rosemount 3490 Product Data Sheet

Non-contacting radar technology

Non-contacting radar technology is ideal for a wide range of applications as it is maintenance-free, has a top-down installation that reduces the risk of leakages, and is unaffected by process conditions such as density, viscosity, temperature, pressure, and pH.

The Rosemount 1208C uses Frequency Modulated Continuous Wave (FMCW) technology and smart algorithms to maximize measurement accuracy and reliability, even in small tanks and challenging fast-filling vessels.

Application examples

Level and pump control

Pump stations need accurate measurement and control to ensure an optimal water flow to the next stage of the potabiliztion process, while also avoiding overflows and pumps from dry-running. Flow and level measurement are essential to ensure a sustainable extraction of water and a sufficient supply of water to the next phases of the potabilization process.

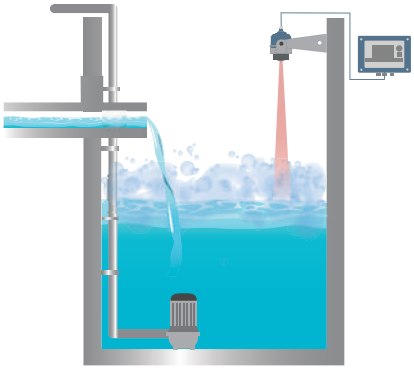

Open channel flow

Open-air channels transport water from a water source to a water plant where it will be processed. Flow monitoring in open channels is important to know the amount of water that is flowing to comply with regulations and avoid flooding.

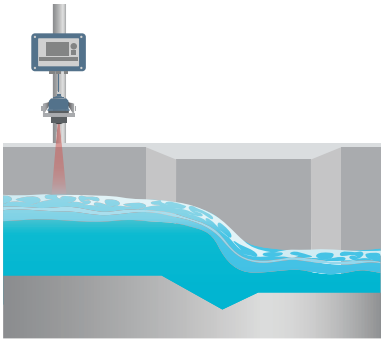

Differential level

In the screening process level measurement is necessary to monitor the level of water in the different parts of the screen, which will determine when to start the cleaning of the sieve.

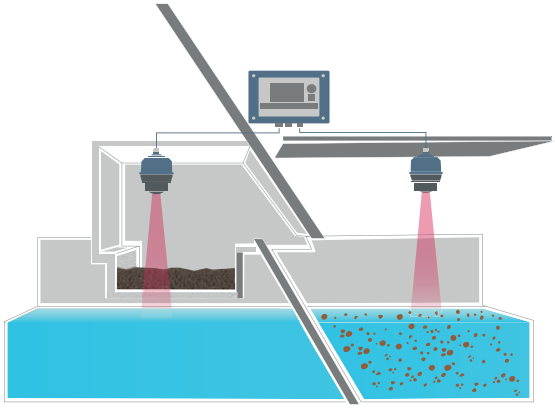

Tank volume

Storage tanks are used in water processes to store chemical substances, which are needed to treat the water. Level measurement is necessary to monitor and control the inside of this tanks and avoid overfilling.

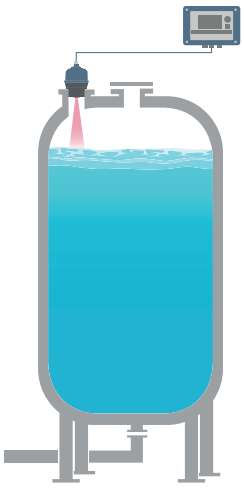

Access information when you need it with asset tags

Newly shipped devices include a unique QR code asset tag that enables you to access serialized information directly from the device. With this capability, you can:

- Access device drawings, diagrams, technical documentation, and troubleshooting information in your MyEmerson account
- Improve mean time to repair and maintain efficiency
- Ensure confidence that you have located the correct device
- Eliminate the time-consuming process of locating and transcribing nameplates to view asset information

Ordering information

Rosemount 1208C Level and Flow Transmitter



The Rosemount 1208C is a non-contacting radar transmitter for continuous measurement of level, and volume flow in open channels.

VIEW PRODUCT >

Models

Description	Output	Thread type	Model number
Rosemount 1208C Level and Flow Transmitter	2-wire 4-20 mA/HART	NPT 1½-in.	1208CN
		G 1½-in.	1208CG

Accessories

Mounting brackets

Description	Material	Part number
Mounting bracket, standard, for pipe/ceiling/wall	316L	01208-5000-0001
Mounting bracket, extendable, for pipe/wall	316L	01208-5000-0002

Process connection adapters and flanges

Description	Inner thread	Material	Part number
2-in. Class 150 flange for non-pressurized applications	NPT 1½-in.	PE100	01208-5000-0003
3-in. Class 150 flange for non-pressurized applications	NPT 1½-in.	PE100	01208-5000-0004
4-in. Class 150 flange for non-pressurized applications	NPT 1½-in.	PE100	01208-5000-0005
2-in. Class 150 flange, ASME B16.5	NPT 1½-in.	316/316L	01208-5000-0006
3-in. Class 150 flange, ASME B16.5	NPT 1½-in.	316/316L	01208-5000-0007
4-in. Class 150 flange, ASME B16.5	NPT 1½-in.	316/316L	01208-5000-0008
2-in. NPT adapter	NPT 1½-in.	316/316L/1.4404	01208-5000-0009
DN50 PN10/PN16 flange for non-pressurized applications	G 1½-in.	PE100	01208-5000-0010
DN80 PN10/PN16 flange for non-pressurized applications	G 1½-in.	PE100	01208-5000-0011
DN100 PN10/PN16 flange for non-pressurized applications	G 1½-in.	PE100	01208-5000-0012
DN50 PN10/PN16 flange, EN1092-1	G 1½-in.	1.4404	01208-5000-0013
DN80 PN10/PN16 flange, EN1092-1	G 1½-in.	1.4404	01208-5000-0014
DN100 PN10/PN16 flange, EN1092-1	G 1½-in.	1.4404	01208-5000-0015

Gasket for G threaded version

The transmitter is shipped with an EPDM gasket.

Description	Approvals	Material	Part number
Gasket 1½-in., dia 60/47.8/2.0	N/A	FKM GLT	01208-5000-0016
	FDA, EC 1935/2004, NSF, WRAS	EPDM	01208-5000-0017

Nut

The applicable nut is also shipped with each transmitter.

Description	Material	Part number
Nut G1½-in.	PVDF	01208-5000-0018
Nut NPT1½-in.	PVDF	01208-5000-0019

Cables and connectors

Description	Length	Part number
Cable assembly, 4P A-code, M12 female angled - M12 male straight, IP66/IP68	6.6 ft. (2 m)	01208-5000-0020
	16.4 ft. (5 m)	01208-5000-0021
	32.8 ft. (10 m)	01208-5000-0022
	65.6 ft. (20 m)	01208-5000-0023
Cable assembly, 4P A-code, M12 female straight - M12 male straight, IP66/IP68	6.6 ft. (2 m)	01208-5000-0024
	16.4 ft. (5 m)	01208-5000-0025
	32.8 ft. (10 m)	01208-5000-0026
	65.6 ft. (20 m)	01208-5000-0027
Cable assembly, 4P A-code, M12 female angled - Unterminated, IP66/IP68	6.6 ft. (2 m)	01208-5000-0028
	16.4 ft. (5 m)	01208-5000-0029
	32.8 ft. (10 m)	01208-5000-0030
	65.6 ft. (20 m)	01208-5000-0031
	164 ft. (50 m)	01208-5000-0032
Cable assembly, 4P A-code, M12 female straight - Unterminated, IP66/IP68	6.6 ft. (2 m)	01208-5000-0033
	16.4 ft. (5 m)	01208-5000-0034
	32.8 ft. (10 m)	01208-5000-0035
	65.6 ft. (20 m)	01208-5000-0036
	164 ft. (50 m)	01208-5000-0037
Connector(1), 4P A-code, M12 female straight - Field attachable, IP67	N/A	01208-5000-0038

(1) *A connector is shipped with each transmitter.*

Performance specifications

General

Reference conditions

- Measurement target: Stationary metal plate, no disturbing objects
- Temperature: 59 to 77 °F (15 to 25 °C)
- Ambient pressure: 14 to 15 psi (960 to1060 mbar)
- Relative humidity: 25-75%
- Damping: Default value, 2 s

Instrument accuracy (under reference conditions)

±0.08 in. (±2 mm)(1)

Repeatability

±0.04 in. (±1 mm)

Ambient temperature effect

±0.04 in. (±1 mm)/10 K

Sensor update rate

1 update per second

Maximum level rate

200 mm/s

Measuring range

Maximum measuring range

49 ft. (15 m)(2)

(1) Refers to inaccuracy according to IEC 60770-1 when excluding installation dependent offset. See the IEC 60770-1 standard for a definition of radar specific performance parameters and if applicable corresponding test procedures.
(2) The measuring range is limited to 33 ft. (10 m) for oil-based media (dielectric constant < 10). Also note that a combination of adverse process conditions, such as heavy turbulence, foam, and condensation, together with products with poor reflection may affect the measuring range.

Accuracy over measuring range

Figure 2 illustrates the accuracy over measuring range at reference conditions.

Figure 2: Accuracy Over Measuring Range

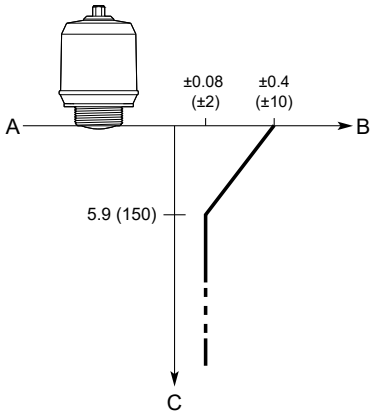

A. Device Reference Point
B. Accuracy in inches (millimeters)
C. Distance in inches (millimeters)

Environment

Vibration resistance

2 g at 10-1000 Hz according to IEC 61298-3, level “field with general application”

Electromagnetic compatibility (EMC)

- EMC Directive (2014/30/EU): EN 61326-1
- NAMUR recommendations NE21

Pressure Equipment Directive (PED)

Complies with 2014/68/EU article 4.3

Radio approvals

- Radio Equipment Directive (2014/53/EU) and Radio Equipment Regulations (S.I. 2017/1206):
  - ETSI EN 302 372
  - ETSI EN 302 729
  - EN 62311
- Part 15 of the FCC Rules
- Industry Canada RSS 211

Related information

Product certifications

Functional specifications

General

Field of application

Continuous measurement of level and open channel flow.

Minimum dielectric constant

2

Measurement principle

Frequency Modulated Continuous Wave (FMCW)

Frequency range

77 to 81 GHz

Maximum output power

3 dBm (2 mW)

Internal power consumption

< 0.8 W in normal operation

Humidity

0 - 100% relative humidity, non-condensing

Turn-on time

< 60 s(3)

4-20 mA HART®

Output

Two-wire, 4-20 mA. Digital process variable is superimposed on 4-20 mA signal, and available to any host that conforms to the HART protocol. The digital HART® signal can be used in multidrop mode.

HART universal revision

7

(3) Time from when power is applied to the transmitter until performance is within specifications.

Load limitations

For HART® communication, a minimum loop resistance of 250 Ω is required. Maximum loop resistance (R) is determined by the voltage level of the external power supply (U_E):

$R = 44.4 \times (U_E - 14)$

Figure 3: Load Limits

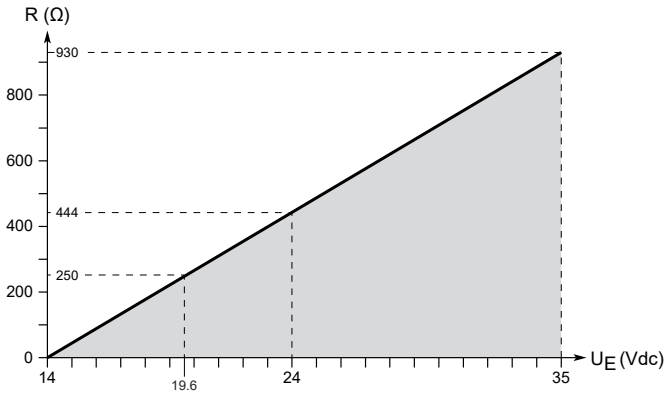

Analog signal on alarm

The transmitter automatically and continuously performs self-diagnostic routines. If a failure or a measurement error is detected, the analog signal will be driven offscale to alert the user. High or low failure mode is user-configurable.

Table 1: Signal on Alarm

Standard	High	Low
Rosemount standard	≥ 21.75 mA	≤ 3.75 mA
NAMUR NE43	≥ 21.5 mA	≤ 3.6 mA

Analog saturation levels

The transmitter will continue to set a current that corresponds to the measurement until reaching the associated saturation limit (and then freeze).

Table 2: Saturation Levels

Standard	High	Low
Rosemount standard	20.8 mA	3.9 mA
NAMUR NE43	20.5 mA	3.8 mA

Configuration

Configuration tools

- Field Device Integration (FDI) compliant systems
- Device Descriptor (DD) compliant systems
- Device Type Manager (DTM™) compliant systems (pending)

Damping

User selectable (default is 2 s, minimum is 0 s)

Output units

- Level and distance: ft., in., m, cm, mm
- Level rate: ft/s, in./min, in./s, m/h, m/s
- Volume: ft^3, $in.^3$, yd^3, US gal, imperial gal, barrel (bbl), m^3, l
- Volume flow: US gal/h, m^3/h
- Temperature: °F, °C
- Signal strength: mV

Output variables

Variable	4-20 mA	Digital output
Level	✓	✓
Distance (ullage)	✓	✓
Volume	✓	✓
Volume flow	✓	✓
Electronics temperature	N/A	✓
Level rate	N/A	✓
Signal strength	N/A	✓

Volume flow calculations

- Linearization table
- Parshall flume
- Khafagi-Venturi flume

Process pressure

-15 to 43.5 psig (-1 to 3 bar)

Note
The PE100 flanges must be used only in non-pressurized applications.

Temperature limits

Process temperature

-40 to 176 °F (-40 to 80 °C)

Ambient temperature

-40 to 176 °F (-40 to 80 °C)

Storage temperature

-40 °F to 194 °F (-40 °C to 90 °C)

Physical specifications

Material selection

Emerson provides a variety of Rosemount products with various product options and configurations, including materials of construction that can be expected to perform well in a wide range of applications. The Rosemount product information presented is intended as a guide for the purchaser to make an appropriate selection for the application. It is the purchaser's sole responsibility to make a careful analysis of all process parameters (such as all chemical components, temperature, pressure, flow rate, abrasives, contaminants, etc.), when specifying product, materials, options, and components for the particular application. Emerson is not in a position to evaluate or guarantee the compatibility of the process fluid or other process parameters with the product, options, configuration, or materials of construction selected.

Housing and enclosure

Process connection

NPT 1½-in. or ISO 228/1-G1½-in. thread with a choice of different brackets, adapters, and flanges

Materials

- Transmitter housing: Polyvinylidene fluoride (PVDF)
- M12 housing: Zinc die-cast nickel-plated
- M12 contact body: Polyamide (PA)

Transmitter weight

0.8 lb (0.35 kg)

Ingress protection

Enclosures meet NEMA® Type 4X/6P, IP66, and IP68 (33 ft. [10 m] for 1000 hours[4]) when properly installed.

Impact protection

IK07 (4 J impact test)

(4) Verified with selection of cables from Weidmuller; for other cable selections IP68 conditions may vary.

Mounting bracket

Materials

- Bracket: Stainless steel 316L
- Nut: PVDF

Flanges

Materials

- Polyethylene PE100
- Stainless steel 316/316L
- Stainless steel 1.4404

Threaded adapters

Materials

Stainless steel 316/316L/1.4404

Material exposed to tank atmosphere

- Antenna and housing: PVDF
- Gasket: EPDM or FKM GLT
- Flange: PE100, 316/316L, or 1.4404
- Threaded adapter: 316/316L/1.4404

Electrical connection

Power supply

The transmitter operates on 14-35 Vdc at the transmitter terminals.

Connector type

M12 male (A-coded)

Cable selection

Use 24-18 AWG wire (0.20-0.75 mm^2). Twisted pairs and shielded wiring are recommended for environments with high EMI (electromagnetic interference).

Wiring diagram

Figure 4: Connection

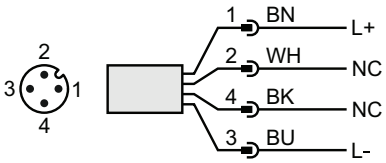

Table 3: Pin Assignment

Pin	Wire color(1)		Signal	
1	BN	Brown	L+	24 V
2	WH	White	NC	Not connected
3	BU	Blue	L-	0 V
4	BK	Black	NC	Not connected

(1) *According to IEC 60947-5-2.*

Installation considerations

Before installing the transmitter, follow recommendations for mounting position, sufficient free space, nozzle requirements, etc.

Mounting position

When finding an appropriate location on the tank for the transmitter, the conditions of the tank must be carefully considered.

Consider the following guidelines when mounting the transmitter:

- For optimal performance, the transmitter should be installed in locations with a clear and unobstructed view of the product surface.
- The transmitter should be mounted with as few internal structures as possible within the signal beam.
- Do not mount close to or above the inlet stream.
- Do not mount the transmitter on a manway cover.
- Do not position the transmitter directly over a side manway door.
- Multiple Rosemount 1208C transmitters can be used in the same tank without interfering with each other.

Figure 5: Recommended Mounting Position

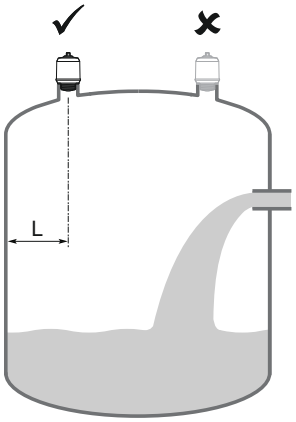

Free space requirements

If the transmitter is mounted close to a wall or other tank obstruction such as heating coils and ladders, noise might appear in the measurement signal. See Table 4 for recommended clearance.

Figure 6: Free Space Requirements

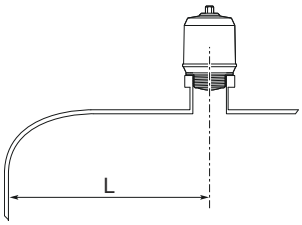

Table 4: Distance to Tank Wall (L)

Minimum	Recommended
8 in. (200 mm)	½ of tank radius

Inclination

The transmitter should be mounted vertically to ensure a good echo from the product surface. See Figure 7 for recommended maximum inclination.

Figure 7: Inclination

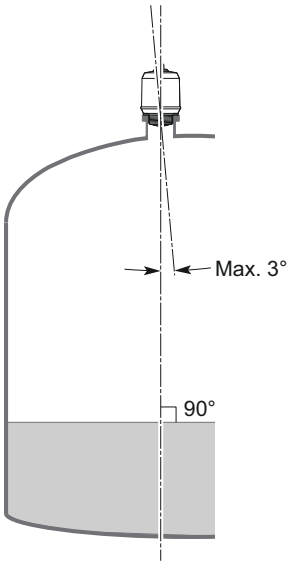

Non-metallic tanks

Nearby objects outside the tank may cause disturbing radar echoes. Wherever possible, the transmitter should be positioned so that objects close to the tank are kept outside the signal beam.

Beam angle and beam width

The transmitter should be mounted with as few internal structures as possible within the signal beam.

Figure 8: Beam Angle and Beam Width

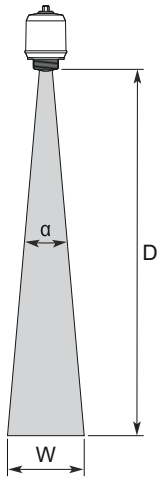

Beam angle (α)

8°

Beam width

See Table 5 for beam width at different distances.

Table 5: Beam Width

Distance (D)	Beam width (W)
6.6 ft. (2 m)	0.9 ft. (0.3 m)
13.1 ft. (4 m)	1.8 ft. (0.6 m)
19.7 ft. (6 m)	2.8 ft. (0.8 m)
26.2 ft. (8 m)	3.7 ft. (1.1 m)
32.8 ft. (10 m)	4.6 ft. (1.4 m)
49.2 ft. (15 m)	6.9 ft. (2.1 m)

Nozzle requirements

To allow the microwaves to propagate undisturbed, the nozzle dimensions should be kept within the specified limits as given in Table 6. The inside of the nozzle must be smooth (i.e. avoid bad welding, rust, or deposit).

Figure 9: Mounting in Nozzles

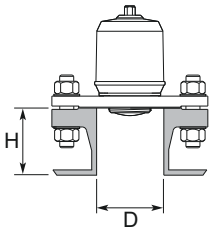

Table 6: Nozzle Requirements

Nozzle diameter (D)	Maximum nozzle height (H)
1.5 in. (40 mm)	5.9 in. (150 mm)
2 in. (50 mm)	7.9 in. (200 mm)
3 in. (80 mm)	11.8 in. (300 mm)
4 in. (100 mm)	15.8 in. (400 mm)
6 in. (150 mm)	23.6 in. (600 mm)

Product certifications

See the Rosemount 1208C Product Certifications document for detailed information on the existing approvals and certifications.

Dimensional drawings

Related information

Type 1 Drawing

Transmitter

Figure 10: Rosemount 1208C

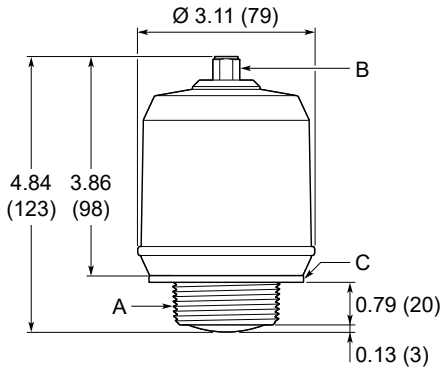

A. NPT 1½-in. or ISO 228/1-G1½-in. thread
B. M12 male connector (A-coded)
C. Gasket for G threaded version

Dimensions are in inches (millimeters).

Threaded adapter

Figure 11: 2-in. NTP Threaded Adapter

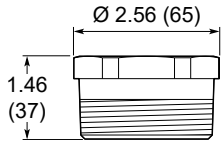

Dimensions are in inches (millimeters).

Mounting brackets

Figure 12: Standard Version

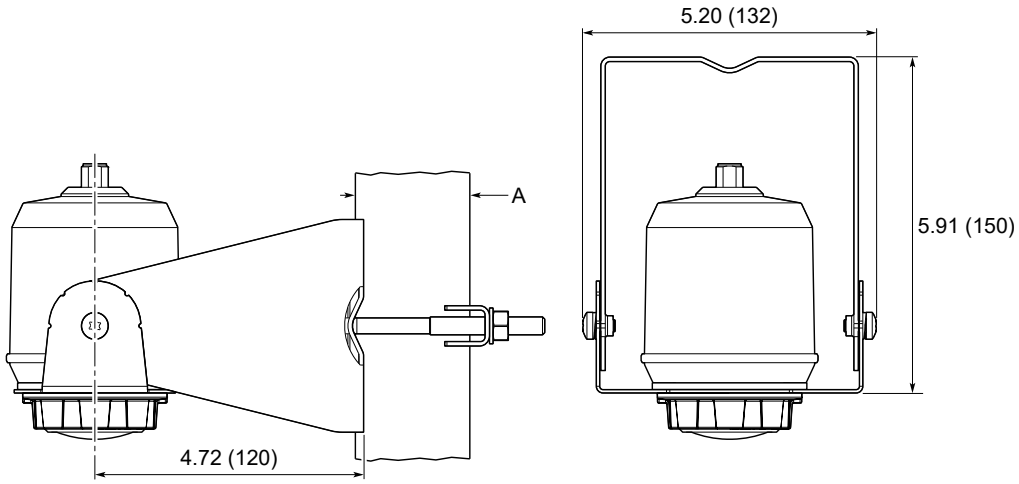

A. For 1- to 2-in. nominal pipe sizes; 2-in. pipe is the recommended size

Dimensions are in inches (millimeters).

Figure 13: Extendable Version

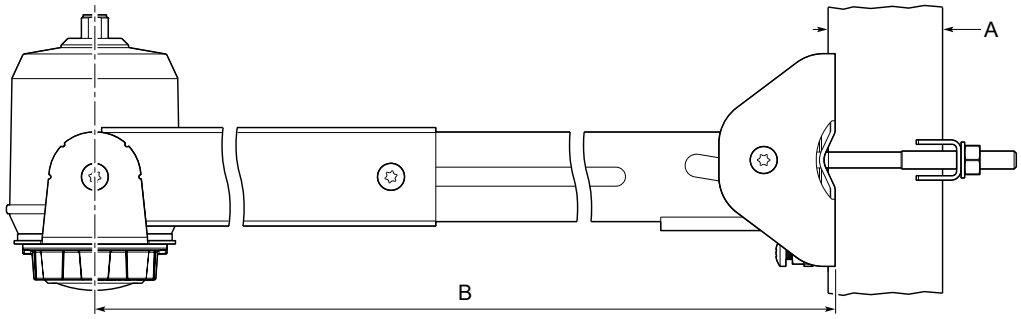

A. For 1- to 2-in. nominal pipe sizes; 2-in. pipe is the recommended size
B. Adjustable length: 17.5 to 28.9 in. (445 to 735 mm)

Bracket hole pattern

Figure 14: Hole Pattern for Wall Mounting

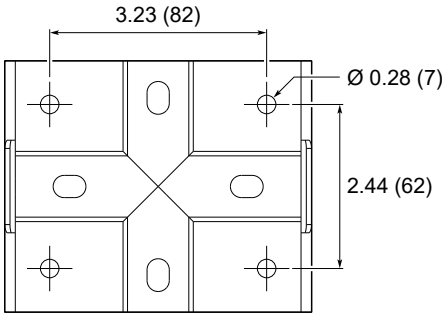

Dimensions are in inches (millimeters).

00813-0200-7062
Rev. AB
February 2023

For more information: **Emerson.com**

©2023 Emerson. All rights reserved.

Emerson Terms and Conditions of Sale are available upon request. The Emerson logo is a trademark and service mark of Emerson Electric Co. Rosemount is a mark of one of the Emerson family of companies. All other marks are the property of their respective owners.

ROSEMOUNT™

EMERSON™