E20857

Mounting set for position sensors

SYSTEM COMPONENT M12 BOLT

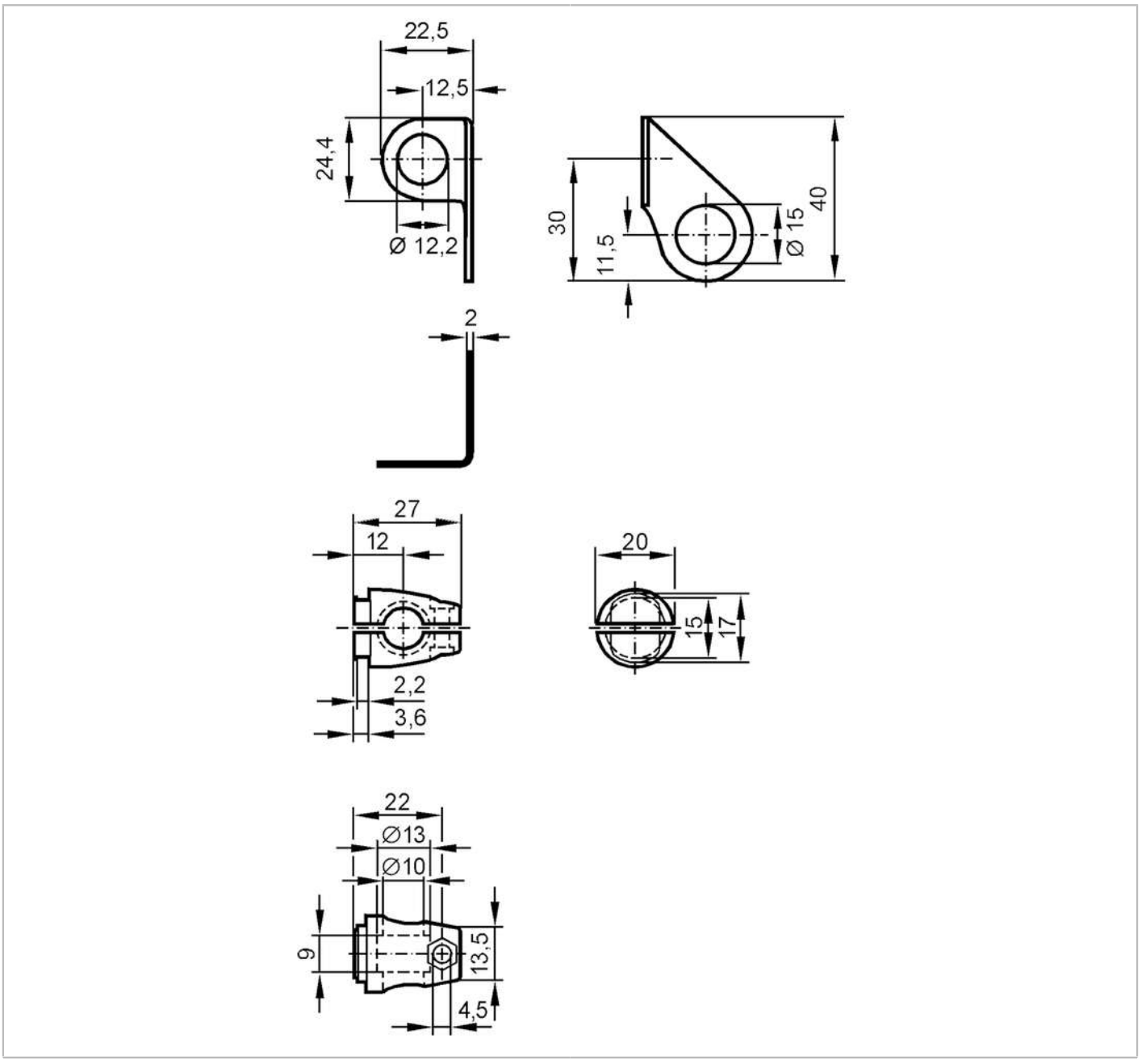

Application		
Design		clamp mounting
Mechanical data		
Weight	[g]	87
Type of mounting		free-standing; (M8)
Dimensions	[mm]	Ø 12.2
Materials		fixture: stainless steel (1.4571/316Ti); Clamp: stainless steel (1.4408)
Accessories		
Items supplied		screw: 1 x M8 x 40
Remarks		
Pack quantity		1 pcs.