



CONNECT AND PROTECT

Varistar Data/Network Systems

nVent
SCHROFF

Cabinets – Varistar Datacom/Networking

OVERVIEW

MAIN KATALOG

Cabinets 1

Wall mounted cases 2

Accessories for cabinets and wall mounted cases . . 3

Climate control . . 4

Electronics cases 5

Subracks/ 19" chassis 6

Front panels, plug-in units 7

Systems 8

Power supply units 9

Backplanes 10

Connectors, front panel component system 11

Appendix 12



01013017



01013018

FAKTEN UND ZAHLEN ZU SERVERSCHRÄNKEN VARISTAR

Rack dimensions	Load-carrying capacity up to 1600 kg standard model height, 42 to 52 U width 600 and 800 mm depth 1000 to 1200 mm
Profile	Grid holes and meander-shaped profile with mounting options on all three planes
Doors	Full doors and double doors with 1- or 3-point locking, opening angle 180° to left or right
Top covers	Solid, perforated, with cable entry brush strips, flat with various cutout zones, raised
Base plate	Without (open), multi-piece, brush strips, filler panels
Side panels	Screw-fixed or with quick-release fasteners and separating walls for side-by-side cabinets
Safety	Various handle and closing options, including electronic and remote
19" plane	Suitable for recessed mounting in 25 mm increments in server cabinets
Accessories	Over 1000 parts and components, including those for cabling in various cable ducting zones

Cabinets – Varistar Datacom/Networking

OVERVIEW

DESIGNED FOR DATA AND NETWORK TECHNOLOGY

- **High installed load of 1600 kg**
- **Varistar Server Cabinets, Electronic-Packaging at its Best-**
- **Wide variety of designs and dimensions**
- **Unique meander-shaped (zig-zag) profile with multiple mounting options and new cable management options**

FLEXIBLE SOLUTIONS

The more complex and demanding the conditions in which your IT infrastructure operates, the greater the demands that need to be met by an individually adaptable server or network cabinet.

- **Flexible platform (dimensions)**
- **Compatibility of all components**
- **Continual ongoing development**



01006014

- Datacom cabinet with two 19"planes and base
- Single and side-by-side cabinets



01006012

- Server cabinet with perforated front and rear door, up to 1200 mm deep
- Single and side-by-side cabinets



01006011

- Network cabinet with 2, 3 or 4 divider units
- Flexible cable ducting and secure separation of divider units

Übersicht 1.124

Varistar-Plattform . 1.4
Maßbilder 1.8

Varistar NET Plus 1.126
Varistar Server .. 1.128
Varistar Colocation 1.130
Befestigungs-material 1.134
Lenkrollen 1.134
Kranösen 1.135
Dachlüfter 1.135
Kantenschutz 1.138
Bürstenleisten 1.138
Bodenbleche 1.140
Sockel 1.142
Kippschutz 1.144
19"-Winkelprofile .. 1.145
Tiefenstreben 1.146
Gleitschienen. 1.147
19"-Fachböden 1.148
Elektronische Schließung 1.151
Zone 1, Zone 2 Kabelmanagement . 1.157
Zone 3 Kabel-management 1.160
Zone 4 Kabel-management 1.163
Kabelbinder, Klettband 1.165
Kabelüber-längenablage 1.166

RAL 7021 ..... 1.167
RAL 7035/RAL 7021 ..... 1.183

Varistar Elektronik 1.10
Varistar EMC 1.54
Varistar Seismic . 1.84
Varistar Luft/Wasser-Wärmetauscher . 1.224

Cabinets – Varistar Datacom/Networking

VARISTAR NET PLUS



Side-by-side cabinet (without side panel) Single cabinet

- Cabling cabinet with two 19"planes and base/plinth
- Protection class IP 20
- Tested load-carrying capacity 400 kg to IEC 61587-1
- Available in two versions:
  - Single cabinet (with side panels)
  - Side-by-side cabinet (with side-by-side mounting kit)

DELIVERY INCLUDES (Completely assembled and earthed)

Item	Qty	Description
1	1	Welded basic frame (Slim-Line) from steel profiles, RAL 7021
2a	1	From cabinet height 42 U/47 U: top cover, St, RAL 7021 with prepunched perforation for subsequent assembly of brush strip, perforated cover plate or fan tray
2b	1	Cabinet height 24 U: top cover, St, RAL 7021, without cut-out zone
3	1	Front door: frame St, RAL 7035, with safety glass 6 mm and 180° hinge, single point locking and lever handle (optionally with DIN profile half cylinder)
4	1	Rear door, St, RAL 7035, with 180° hinge, single point locking and lever handle (optionally retrofittable with DIN profile half cylinder)
5a	2	Single cabinet: side panels, St, RAL 7035, with quick-release fastener
5b	1	Side-by-side cabinet: 1 side-by-side mounting kit
6	4	Adaptor bracket for reduced width, St, finish AlZn, for assembly of 19" panel/slide mounts (only with 800 mm wide cabinets)
7	4	19" panel/slide mount, St, RAL 7035, with EIA perforation (800 mm wide cabinets: assembled on the adaptor bracket for reduced width); 600 mm cabinet depth: distance to front door 50 mm; at 800 mm 150 mm, from 900 mm cabinet depth: 70 mm; depth-adjustable in 25 mm increments
8	1	Base plate for lateral cable ducting, St, RAL 7021, subsequent lateral assembly of brush strip possible
9	1	Base/plinth, St, RAL 7021, height 100 mm with front and rear ventilation trim, mounted base/plinth trims, integrated feet
10	1	GND/earthing kit, assembled

Cabinets – Varistar Datacom/Networking

VARISTAR NET PLUS

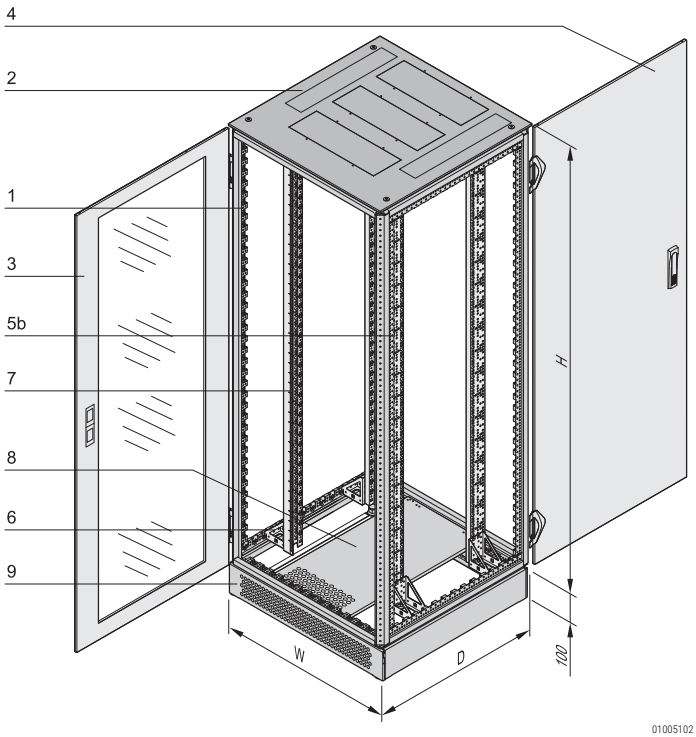

Side-by-side cabinet

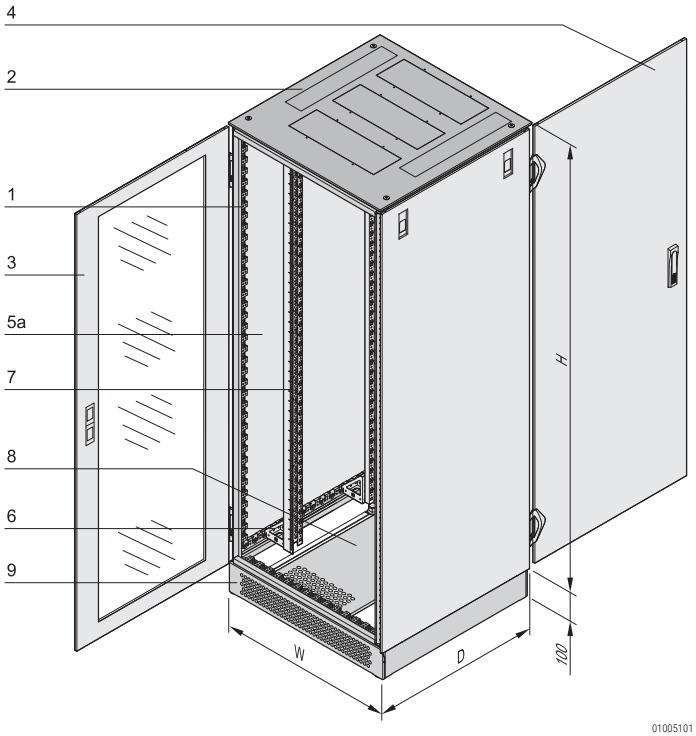

Single cabinet

ORDER INFORMATION

Height	Height H	Width W	Depth D	Side-by-side cabinet	Single cabinet
U	mm	mm	mm	Part No.	Part No.
24	1200	600	600	10130-073	10130-072
24	1200	600	800	10130-075	10130-074
24	1200	600	900	10130-077	10130-076
24	1200	600	1000	10130-079	10130-078
24	1200	800	600	10130-081	10130-080
24	1200	800	800	10130-083	10130-082
24	1200	800	900	10130-085	10130-084
24	1200	800	1000	10130-087	10130-086
42	2000	600	600	10130-089	10130-088
42	2000	600	800	10130-091	10130-090
42	2000	600	900	10130-093	10130-092
42	2000	600	1000	10130-095	10130-094
42	2000	800	600	10130-097	10130-096
42	2000	800	800	10130-099	10130-098
42	2000	800	900	10130-101	10130-100
42	2000	800	1000	10130-103	10130-102
47	2200	600	600	10130-105	10130-104
47	2200	600	800	10130-107	10130-106
47	2200	600	900	10130-109	10130-108
47	2200	600	1000	10130-111	10130-110
47	2200	800	600	10130-113	10130-112
47	2200	800	800	10130-115	10130-114
47	2200	800	900	10130-117	10130-116
47	2200	800	1000	10130-119	10130-118
DIN profile half cylinder, common locking for lever handle (1 key type 333 fits all locks) incl. 2 keys					**25127-995**
Tip-over protection for floor mounting is screwed to the floor, PU 2 pieces					**23130-386**

NOTE

- The 24 U cabinet has a top cover without prepunched perforation (not suitable for retrofitting with brush strips, fan tray, etc.)
- A standard cabinet can be expanded simply with additional components, see from page 1.183

Part number in bold face type: ready for shipping within 2 working days
Part number in normal type: ready for shipping within 10 working days

Cabinets – Varistar Datacom/Networking

VARISTAR SERVER, 1600 KG, SIDE-BY-SIDE CABINET



Left RAL 7021, right RAL 7035

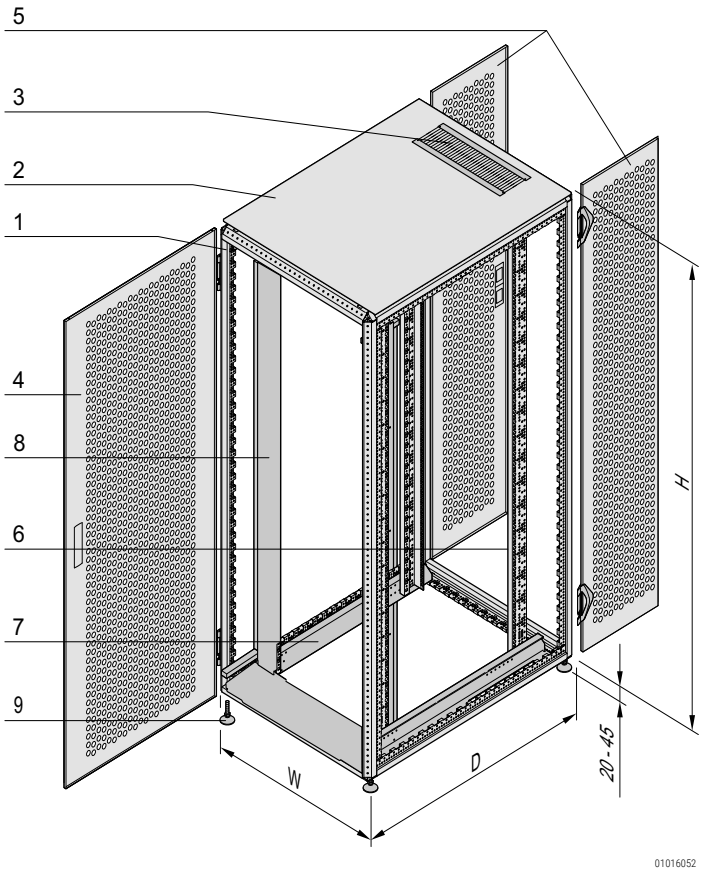

- Server cabinet with perforated doors, airflow rate 78%
- Protection class IP 20
- Static load-carrying capacity up to 1600 kg
- Installation of different servers possible
- Available in three color schemes
  - Stone gray RAL 7021
  - Light grey RAL 7035
  - Signal white RAL 9003

DELIVERY INCLUDES (Completely assembled and earthed)

Item	Qty.	Description
1	1	Welded basic frame (Slim-Line) from steel profiles, RAL 7021
2	1	Flat top cover, St, RAL 7021, with prepunched perforation for retrofitting the brush strip, perforated cover plate (width 600 mm) or perforated and lateral fan tray (width 800 mm)
3	1	Brush strip for 600 mm and 800 mm widths
4	1	Front door, perforated, St, with 180° hinges, 3-point locking and lever handle (option to upgrade with DIN profile half cylinder), colors RAL 7035, RAL 7021, or RAL 9003 (see order information)
5	1	Rear double door, perforated, St, with 180° hinges, 3-point locking and lever handle (option to upgrade with DIN profile half cylinder), colors RAL 7035, RAL 7021, or RAL 9003 (see order information)
6	4	19" panel/slide mounts, St, mounted in 740 mm intervals, with U marking, color RAL 7035, RAL 7021, or RAL 9003 (see order information)
7	4	Cross member, St (to accept 19" panel/slide mounts in 800 mm wide cabinets)
8	1	Baffle kits to separate the front side of 19" plane, St, 1.5 mm, color RAL 7035, RAL 7021, or RAL 9003 (see order information)
9	4	Adjustable foot
10	1	Earthing (GND) kit, fitted

VARISTAR SERVER, 1600 KG, SIDE-BY-SIDE CABINET

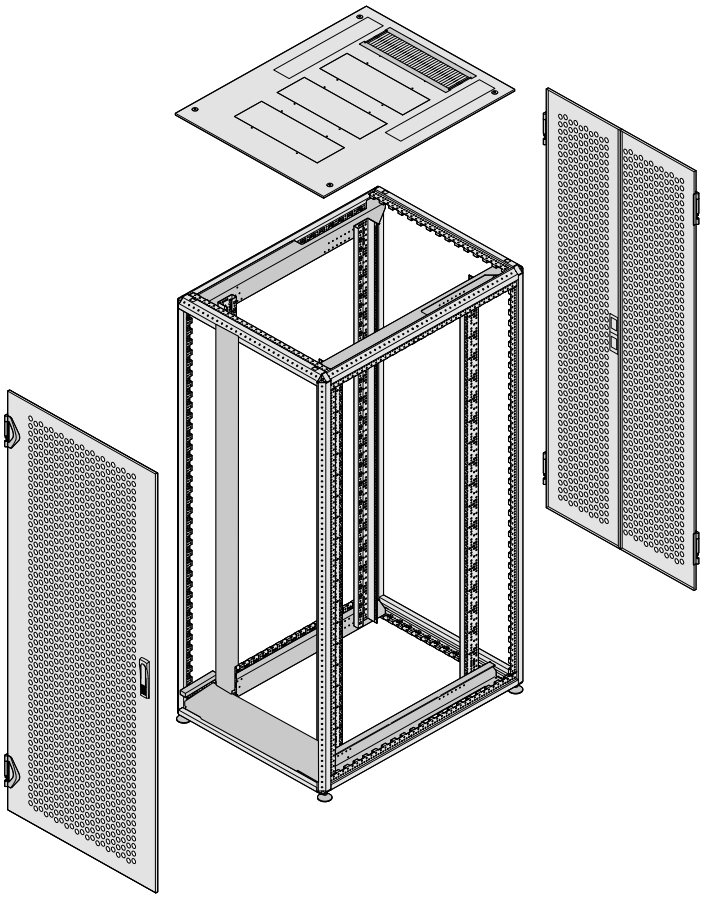

01016051

ORDER INFORMATION

Height U	Height H mm	Width W mm	Depth D mm	Part no. RAL 7021	Part no. RAL 7035	Part no. RAL 9003
42	2000	600	1000	10130-275	11130-275	12130-275
42	2000	600	1200	10130-285	11130-285	12130-285
42	2000	800	1000	10130-276	11130-276	12130-276
42	2000	800	1200	10130-286	11130-286	12130-286
47	2200	600	1000	10130-279	11130-279	12130-279
47	2200	600	1200	10130-289	11130-289	12130-289
47	2200	800	1000	10130-280	11130-280	12130-280
47	2200	800	1200	10130-290	11130-290	12130-290
52	2450	600	1000	10130-283	11130-283	12130-283
52	2450	600	1200	10130-293	11130-293	12130-293
52	2450	800	1000	10130-284	11130-284	12130-284
52	2450	800	1200	10130-294	11130-294	12130-294

Accessories	
DIN profile half cylinder, common locking for lever handle (1 key type 333 fits all locks) incl. 2 keys	**25127-995**
Spare key handle with locking insert 1 piece	**60127-018**
Tip-over protection for floor mounting is screwed to the floor, PU 2 pieces	**23130-386**

NOTE

- For suitable side panel see page 1.132
- For separating wall, see page 1.132
- For covers, see page 1.133
- For electronic locking, see page 1.152
- Cable panel, see page 1.162

Part number in bold face type: ready for shipping within 2 working days
Part number in normal type: ready for shipping within 10 working days

Cabinets – Varistar Datacom/Networking

VARISTAR COLOCATION



RAL 7021 RAL 9003
Illustration shows cabinet with 3 divider units

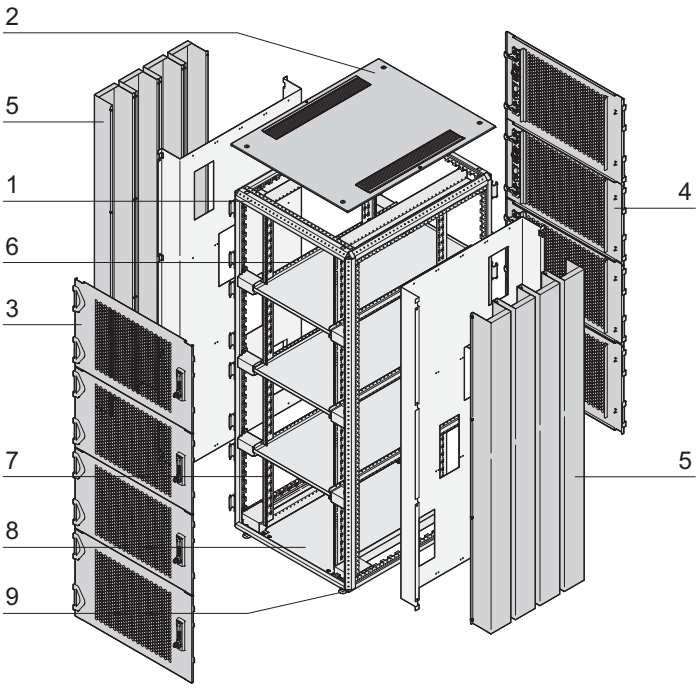



- Colocation cabinets with 2, 3 or 4 divider units to accommodate servers, for example
  - Perforated doors (airflow rate 78%)
  - Multi-point door locking to prevent unauthorized access (lever handle with key and numeric code)
  - Access to false floors and cabling only from the appropriate divider unit
- Flexible cabling, possible from above, below, left or right (data and power cables can be run separately)
- Protection class IP 20
- Available in three color schemes
  - Stone gray RAL 7021
  - Light grey RAL 7035
  - Signal white RAL 9003

DELIVERY INCLUDES (Completely assembled and earthed)

Item	Qty.	Description
1	1	Welded basic frame (Slim-Line) from steel profiles, RAL 7021
2	1	Flat top cover, St, RAL 7021, with brush strip (left and right)
3	1 per divider unit	Front door, frame St, perforated, 180° hinge, 2-point locking and lever handle (key and numeric code),colors RAL 7035, RAL 7021, or RAL 9003 (see order information)
4	1 per divider unit	Rear door, St, perforated, RAL 7021, 180° hinge, 2-point locking and lever handle (key and numeric code), colors RAL 7035, RAL 7021, or RAL 9003 (see order information)
5	2 per divider unit	Cable channels (left, right)
6	2 per divider unit	Depth member for fixing shelf dividers and 19" profiles
7	4 per divider unit	19" panel, St, RAL 7021, with EIA perforation, depth-adjustable in 25 mm increments, standard fitting position 74 mm recessed
8	1 per divider unit	Base plate/shelf divider, can be fitted from inside
9	4	Adjustable foot
10	1	Earthing (GND) kit, fitted

Cabinets – Varistar Datacom/Networking

VARISTAR COLOCATION

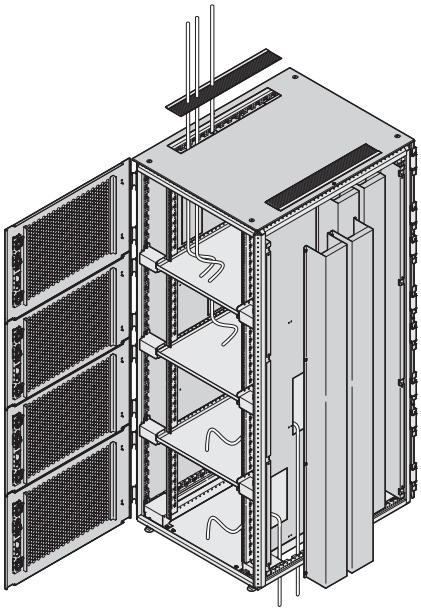





ORDER INFORMATION

Height mm	Width mm	Depth mm	Number of spacings	RAL 7021 Part no.	RAL 7035 Part no.	RAL 9003 Part no.
2000	600	1000	2	10130-202	11130-202	12130-202
2000	600	1000	3	10130-203	11130-203	12130-203
2000	600	1000	4	10130-204	11130-204	12130-204
2000	600	1200	2	10130-214	11130-214	12130-214
2000	600	1200	3	10130-215	11130-215	12130-215
2000	600	1200	4	10130-216	11130-216	12130-216
2000	800	1000	2	10130-205	11130-205	12130-205
2000	800	1000	4	10130-207	11130-207	12130-207
2000	800	1200	2	10130-217	11130-217	12130-217
2000	800	1200	4	10130-219	11130-219	12130-219
2200	600	1000	2	10130-208	11130-208	12130-208
2200	600	1000	3	10130-209	11130-209	12130-209
2200	600	1000	4	10130-210	11130-210	12130-210
2200	600	1200	2	10130-220	11130-220	12130-220
2200	600	1200	3	10130-221	11130-221	12130-221
2200	600	1200	4	10130-222	11130-222	12130-222
2200	800	1000	2	10130-211	11130-211	12130-211
2200	800	1000	4	10130-213	11130-213	12130-213
2200	800	1200	2	10130-223	11130-223	12130-223
2200	800	1200	3	10130-224	11130-224	12130-224
2200	800	1200	4	10130-225	11130-225	12130-225
2450	600	1000	2	10130-257	11130-257	12130-257
2450	600	1000	3	10130-258	11130-258	12130-258
2450	600	1000	4	10130-259	11130-259	12130-259
2450	600	1200	2	10130-269	11130-269	12130-269
2450	600	1200	3	10130-270	11130-270	12130-270
2450	600	1200	4	10130-271	11130-271	12130-271
2450	800	1000	2	10130-260	11130-260	12130-260
2450	800	1000	3	10130-261	11130-261	12130-261
2450	800	1000	4	10130-262	11130-262	12130-262
2450	800	1200	2	10130-272	11130-272	12130-272
2450	800	1200	3	10130-273	11130-273	12130-273
2450	800	1200	4	10130-274	11130-274	12130-274

NOTE

- For suitable side panel see page 1.132
- For separating wall, see page 1.132
- For covers, see page 1.133
- For electronic locking, see page 1.152
- Cable panel, see page 1.162

Part number in bold face type: ready for shipping within 2 working days
Part number in normal type: ready for shipping within 10 working days

SCREW-FIXED SIDE PANEL

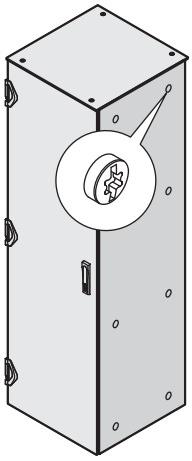

01004083

- Screw-fixed side panel

DELIVERY INCLUDES

Item	Qty.	Description
1	2	Side panel, St, 1 mm, to screw on
2	1	Earthing (GND) kit

ORDER INFORMATION

Height	Height	Depth	Qty/PU	screw-fixed for IP 55 RAL 7021	screw-fixed for IP 55 RAL 7035	screw-fixed for IP 55 RAL 9003
U	mm	mm	piece	Part no.	Part no.	Part no.
42	2000	1000	2	21130-013	22130-013	26130-013
42	2000	1200	2	21130-535	22130-535	26130-535
47	2200	1000	2	21130-018	22130-018	26130-018
47	2200	1200	2	21130-537	22130-537	26130-537
52	2450	1000	2	21130-315	22130-315	26130-315
52	2450	1200	2	21130-318	22130-318	26130-318
Accessories						
Internal retainer for side panel 2 pieces						23130-373

NOTE

- Optional internal locking prevents side panel being removed from outside

SEPARATING WALL

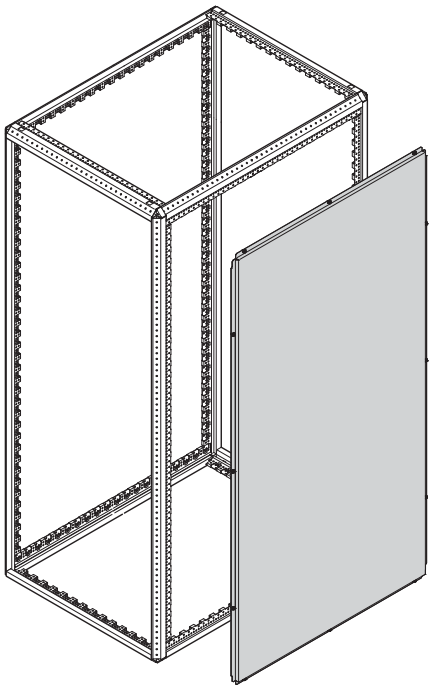

01012058

- Where cabinets are arranged in rows the separating wall replaces the cabinet side wall
- Mounts laterally, prevents unauthorised access
- For cabinet height 42, 47 or 52 U and cabinet depth 1000 mm, 1100 mm or 1200 mm

DELIVERY INCLUDES

Item	Qty	Description
1	1	Separating wall, St, 1 mm, finish AlZn
2	1	Fixing materials kit, user manual

ORDER INFORMATION

For cabinet height U	For cabinet depth mm	Part no.
42	1000	23130-480
42	1100	23130-508
42	1200	23130-481
47	1000	23130-484
47	1100	23130-509
47	1200	23130-485
52	1000	23130-580
52	1100	23130-510
52	1200	23130-581

COVERS FOR FRONT AIR SEPARATION

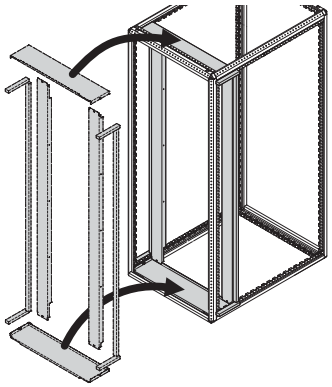

Covers solid, width 800 mm

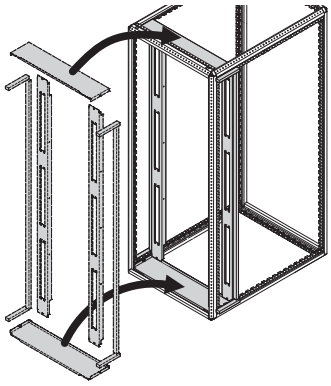

Cover with lateral cut-outs

- Covers prevent unwanted air short-circuits in front, i.e. the mixing of hot exhaust air with cold incoming air
- For cabinet width 600 or 800 mm, for cabinet height 42, 47 or 52 U
- Covers, solid (full height) or with two cable ducting openings (19"x 2 U)
- Baffle plates for recessed integral 19" planes with adapter bracket for reduced width (70, 145, 220 mm) available, can be offset with the 19" plane (recessed)
- Network and server cabinets can be arranged side by side
- Seals, UL 94 HF-1, -20 °C ... 100° C

DELIVERY INCLUDES (Completely assembled and earthed)

Item	Qty.	Description
1	2	Cover, St, 1 mm, left/right
2	1	Cover, top, St, 1 mm
3	1	Cover, bottom, St, 1 mm
4	1	Fixing materials kit, gasketing, user manual

ORDER INFORMATION

Height U	Height mm	Cover, solid for 800 mm width RAL 7021 Part no.	Cover with cable ducting openings for 800 mm width RAL 7021 Part no.
42	2000	21130-735	21130-777
47	2200	21130-736	21130-778
52	2450	21130-737	21130-779

Accessories	
Brush strip for closing the open cable through-ducting opening 1 U, black, PU 6 pieces	23130-153
Clip-on 19" plastic front panels for sealing the open cable ducting openings of the lateral trim; 6 brushes, sufficient for 3 cutouts 1 U, black, PU 10 pieces	**D19BPT1RU**

- Brush strip for top cover, see page
- Perforated cover plate, see page

Part number in bold face type: ready for shipping within 2 working days
Part number in normal type: ready for shipping within 10 working days

ASSEMBLY KIT

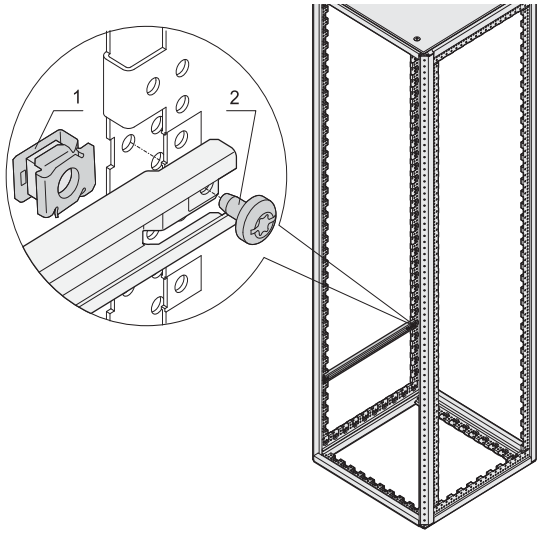

01006065

- For direct assembly of 19" panel/slide mounts, depth members and further components on Varistar frame
- Assembly by pushing in the cage nut into frame or depth member
- Mounting of components possible from the inside as well as the outside

DELIVERY INCLUDES (Kit)

Item	Qty	Description
1	50	Cage nut, St, M5, white zinc-plated
2	50	Screw, St, M5 x 10, white zinc-plated

ORDER INFORMATION

Description	Part No.
Assembly kit, earthed	**23130-141**

CASTORS

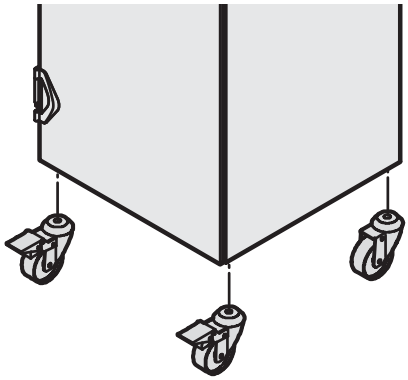

01004082

- For assembly on frame
- Load-carrying capacity 400 kg

DELIVERY INCLUDES

Item	Qty	Description
1	2	Locking castors, PA/St
2	2	Non-locking castors, PA/St
3	1	Assembly kit

ORDER INFORMATION

Description	Part No.
Castors with 2 locking	**23130-077**

NOTE

- Not suitable in connection with base/plinth

CASTORS WITH INTEGRATED ADJUSTABLE FEET

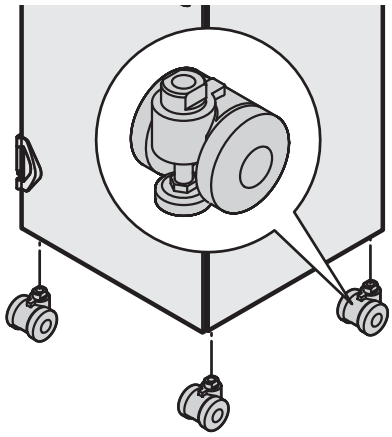

01004156

- For assembly on frame
- Load-carrying capacity 400 kg

DELIVERY INCLUDES

Item	Qty	Description
1	4	Castor with adjustable feet
2	1	Assembly kit

ORDER INFORMATION

Description	Part No.
Castors with integrated adjustable feet	**23130-078**

NOTE

- Not suitable in connection with base/plinth

LIFTING EYE, VARISTAR

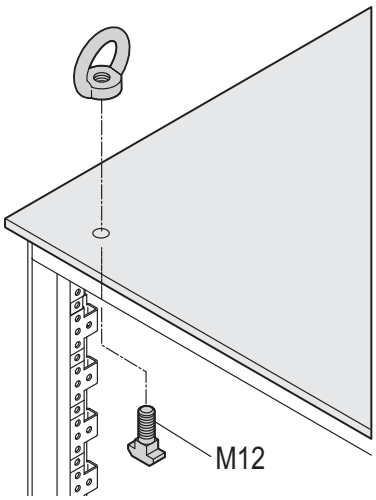

01004100

- Thread M12
- Application and static load-carrying capacity in accordance with DIN 582 (see Technical Info Section, chapter 12)

ORDER INFORMATION

Description	Qty/PU	Part No.
Lifting eye for top cover	4	**23130-072**

NOTE

- Only suitable with top cover, not usable with raised cover

FAN UNIT WITH 3 FANS



01006027

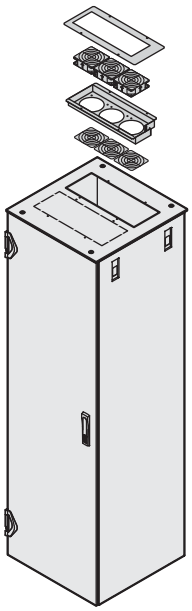

01004102

- Suitable for flat top cover with cut-out zones
- Mounting position completely in cabinet interior, no protrusion over top cover
- 3 fans fully wired
- Mains connection via SCHUKO/UTE plug - IEC 60320 C13 socket

DELIVERY INCLUDES (completely assembled and wired)

Item	Qty	Description
1	1	Fan tray, RAL 7021
2	3	Axial fan 230 V_{AC}, fully wired, connects via SCHUKO/UTE plug - IEC 60320-C12 socket
3	3	Protective grille
4	1	Assembly kit

ORDER INFORMATION

Description	Qty/PU piece	Part no.
Fan unit with 3 fans	1	**23130-070**
Accessories		
Fan with grille, 230 VAC, 38x 119 x 119 mm, at 50 Hz, 162 m3/h, 1 piece		**23130-165**
Thermostat with mains cable 230 V_{AC} (SCHUKO/UTE plug/ IEC 60320 C13 socket), adjustment range 0 ... 60°C, 1 piece		**20118-750**

TECHNICAL DATA of one fan

Frequency	**50** Hz	**60** Hz
Voltage	230 V_{AC}	230 V_{AC}
Airflow volume	162 m^3/h	192 m^3/h
Noise pressure level	37 dB(A)	41 dB(A)
Max. static pressure	73 PA	88 PA
Max. ambient temperature	+70 °C	+70 °C
Power consumption	15 W	14 W

Part number in bold face type: ready for shipping within 2 working days
Part number in normal type: ready for shipping within 10 working days

FLAT TOP COVER WITH CUT-OUT ZONES

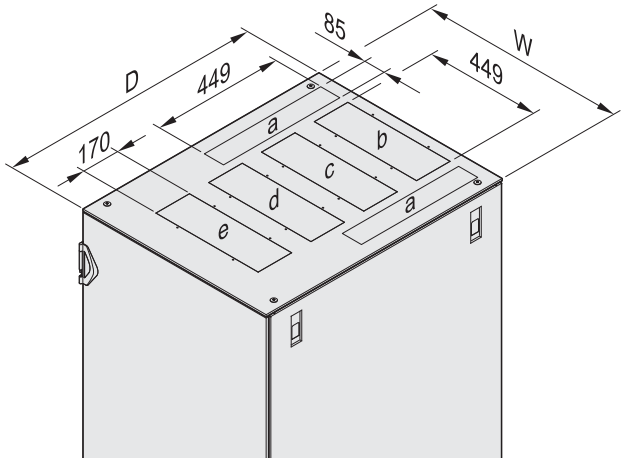

01006097

- Cut-out zones are easy to cut out
- Cut-outs can be fitted with brush strips, fan units, perforated cover plates or edge protectors

DELIVERY INCLUDES

Item	Qty	Description
1	1	Flat top cover, St, 1.5 mm, with cut-out zones for cut-outs, RAL 7021
2	1	GND/earthing kit

ORDER INFORMATION

Width mm	Depth mm	Part no. RAL 7021
600	600	21130-252
600	800	21130-253
600	900	21130-254
600	1000	21130-255
600	1100	21130-542
600	1200	21130-543
800	600	21130-256
800	800	21130-257
800	900	21130-258
800	1000	21130-259
800	1100	21130-544
800	1200	21130-545
Accessories		
Brush strip Nylon, black, PU 2 pieces		**23130-069**
Fan unit with 3 fans with 3 fans, fully assembled and wired, 1 kit		**23130-070**
Perforated cover plate for top cover with cut-out zones 6 mm perforation, incl. earthing, 1 piece		**23130-071**
Edge protection PVC, black, 3 m PVC, black, 3 m, 1 piece		**28127-281**

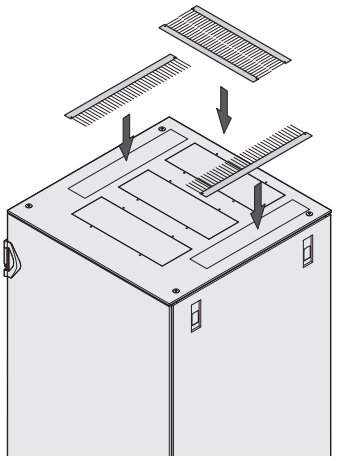
01006092

Flat top cover construction with brush strips

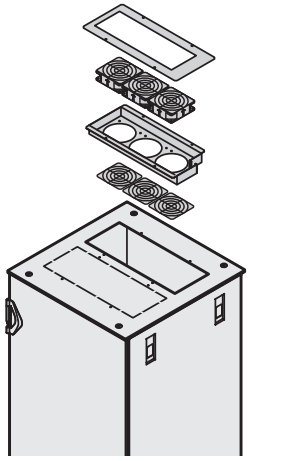
01004102

Flat top cover construction with fan insert

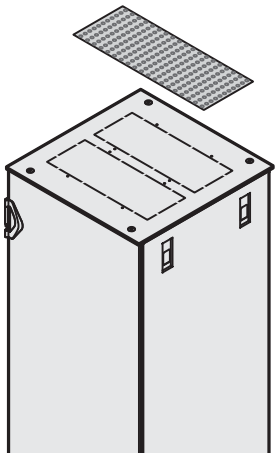
01004103

Flat cop cover construction with cover plate

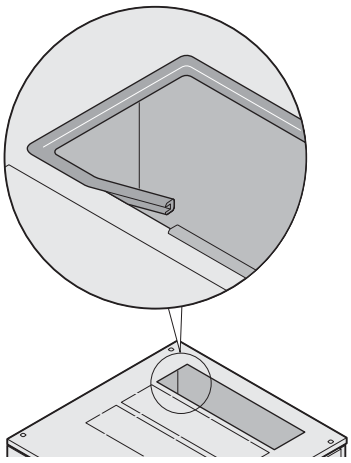
41003065

Flat top cover construction with edge protection

FLAT TOP COVER WITH CABLE THROUGH-DUCTING OPENINGS

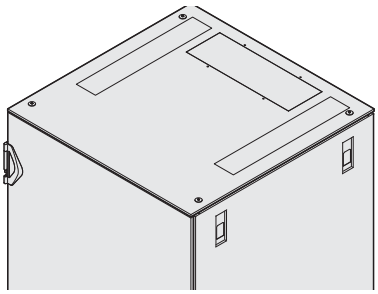

01015052

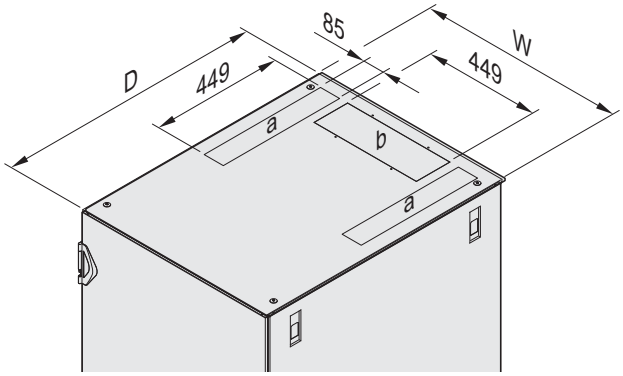

01015050

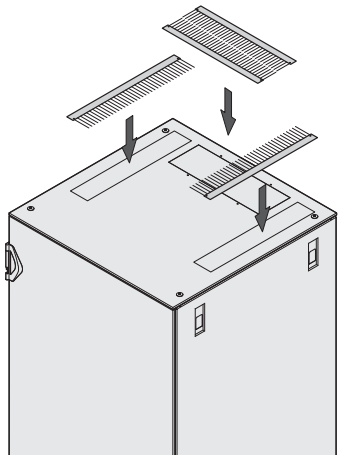

01015051

Flat top cover construction with brush strips

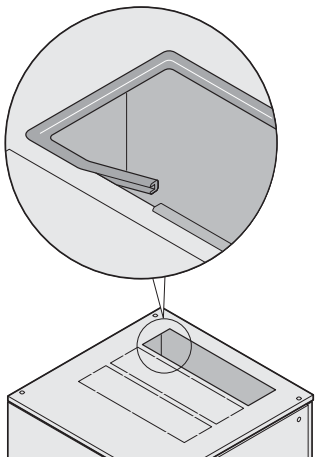

41003065

Edge protection

- Includes earthing
- Color RAL 7021
- St, 1.5 mm
- Cutouts must be covered with brush strips or fitted with edge protection, please order these separately

DELIVERY INCLUDES

Item	Qty	Description
1	1	Flat top cover, St, 1.5 mm, with cutouts, RAL 7021
2	1	GND/earthing kit

ORDER INFORMATION

Width W mm	Depth D mm	Part no.
600	1000	21130-712
600	1100	21130-713
600	1200	21130-714
800	1000	21130-715
800	1100	21130-716
800	1200	21130-717
Accessories		
Brush strip Nylon, black, PU 2 pieces		**23130-069**
Edge protection PVC, black, 3 m PVC, black, 3 m, 1 piece		**28127-281**

NOTE

- Fan insert with 3 fans (23130-070) cannot be used

EDGE PROTECTION PVC, BLACK, 3 M

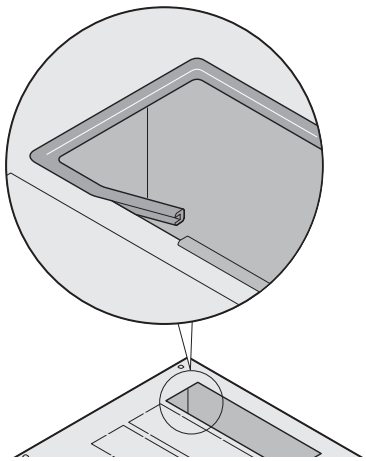

41003065

- Suitable for flat top cover with cut-out zones
- To cover the sharp edges of an open cut-out (protects against injury)

ORDER INFORMATION

Description	Part No.
Edge protection PVC, black, 3 m	**28127-281**

BRUSH STRIP

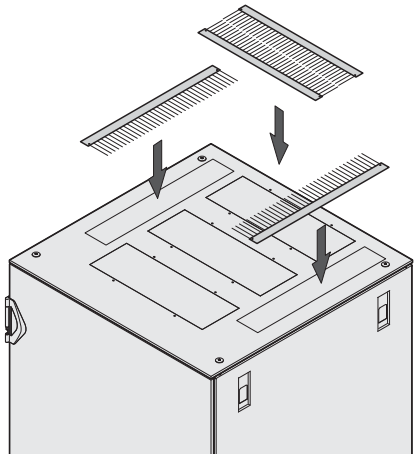

01006092

- For cable ducting with flat top cover (with cut-out zones)
- 600 mm wide top cover: two brush strips cover one centre cut-out
- 800 mm wide top cover: brush strip can be used either lengthways or depthways; one brush strip covers a lateral cut-out, two brush strips cover a centre cut-out

ORDER INFORMATION

Description	Qty/PU	Part no.
Brush strip	2	**23130-069**

PERFORATED COVER PLATE FOR TOP COVER WITH CUT-OUT ZONES

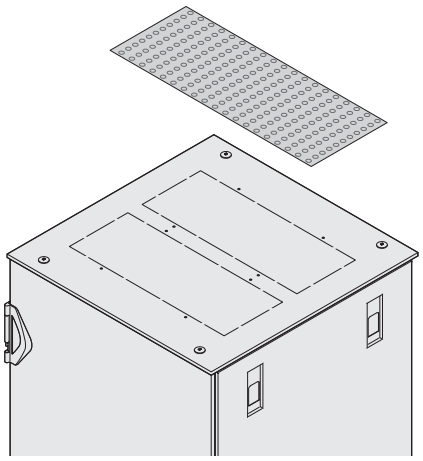

01009056

- Suitable for flat top cover (with cut-out zones), screws on
- Allows heat dissipation from cabinet (perforated with 6 mm holes)

DELIVERY INCLUDES

Item	Qty	Description
1	1	Top cover plate, perforated, 6 mm perforation, St, 1 mm, RAL 7021, incl. GND/earthing
2	1	Assembly kit

ORDER INFORMATION

Description	Qty/PU	Part No.
Perforated cover plate for top cover with cut-out zones	1	**23130-071**

BASE PLATE, ONE-PIECE, SOLID



01017064

- Base plate is solid and covers the entire floor of the cabinet
- Installation takes place from the outside

DELIVERY INCLUDES

Item	Qty.	Description
1	1	Base plate, St, 1.5 mm, RAL 7021
2	1	Mounting materials

ORDER INFORMATION

For cabinet width mm	Depth mm	Qty/PU piece	Part no. RAL 7021
600	1000	1	21130-786
600	1100	1	21130-787
600	1200	1	21130-788
800	1000	1	21130-789
800	1100	1	21130-790
800	1200	1	21130-791

BASE PLATE, ONE-PIECE, WITH CABLE DUCTING

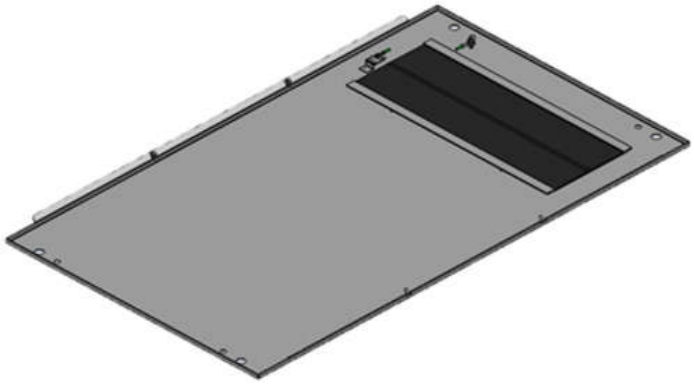

01017063

- Base plate with a cutout for cable ducting
- Cable ducting is covered with a brush strip
- Installation takes place from the outside

DELIVERY INCLUDES

Item	Qty.	Description
1	1	Base plate, St, 1.5 mm, RAL 7021, with cable ducting opening
1	1	Set of brush strips
2	1	Mounting materials

ORDER INFORMATION

For cabinet width mm	Depth mm	Qty/PU piece	Part no. RAL 7021
600	1000	1	21130-792
600	1100	1	21130-793
600	1200	1	21130-794
800	1000	1	21130-795
800	1100	1	21130-796
800	1200	1	21130-797

Part number in bold face type: ready for shipping within 2 working days
Part number in normal type: ready for shipping within 10 working days

BASE PLATE, MULTI-PIECE

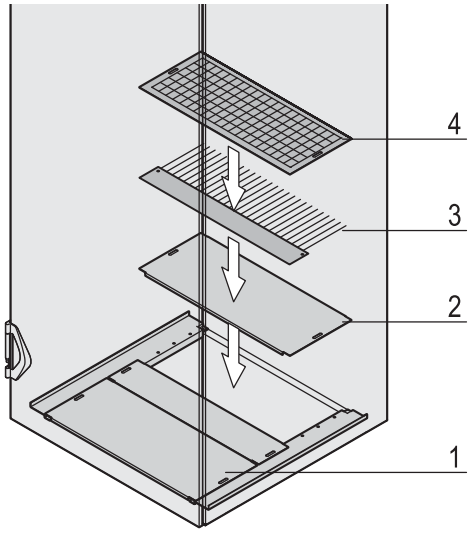

1: Base plate, multi-piece; 2: Cover plate; 3: Brush strip; 4: Filter kit

- The multi-piece base plate is open at the rear
- The opening may be completed
  - with a filter mat
  - with a brush strip for the cable entry
  - with a cover plate

DELIVERY INCLUDES (kit)

Item	Qty	Description
1	1	Multi-piece base plate, St, 1.5 mm, RAL 7021
5	1	Assembly kit

ORDER INFORMATION

Width mm	Depth mm	Part No.
600	600	**23130-001**
600	800	**23130-002**
600	900	23130-003
600	1000	**23130-004**
600	1200	23130-359
800	600	23130-005
800	800	23130-006
800	900	23130-007
800	1000	23130-008
800	1200	23130-361
Item 2 Cover plate for multi-piece base plate, for 600 mm wide cabinets, 200 mm deep, incl. assembly kit, 1 piece		**23130-076**
Item 2 Cover plate for multi-piece base plate, for 800 mm wide cabinets, 200 mm deep, incl. assembly kit, 1 piece		**23130-136**
Item 3 Brush strip for base plate, for 600 mm wide cabinets, 200 mm deep, incl. assembly kit, 1 piece		**23130-074**
Item 3 Brush strip for base plate, for 800 mm wide cabinets, 200 mm deep, incl. assembly kit, 1 piece		**23130-134**
Item 4 Filter mat for base plate, white, class M1 in accordance with EN 799-G3, for 600 mm wide cabinets, 200 mm deep, incl. assembly kit, 1 piece		**23130-075**
Item 4 Filter mat for base plate, white, class M1 in accordance with EN 799-G3, for 800 mm wide cabinets, 200 mm deep, incl. assembly kit, 1 piece		**23130-135**

NOTE

- Is assembled from inside
- Please order cover plate, brush strip or filter mat separately

BASE PLATE FOR LATERAL CABLE DUCTING

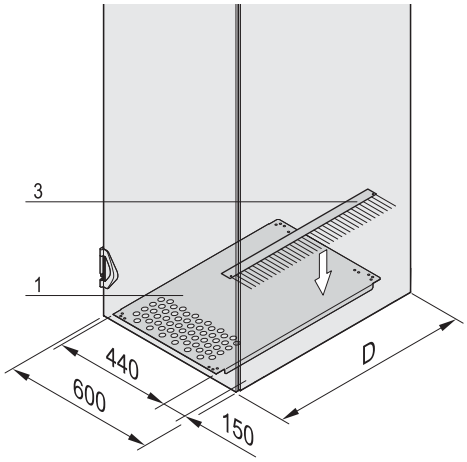

01006061

Cabinet width 600 mm

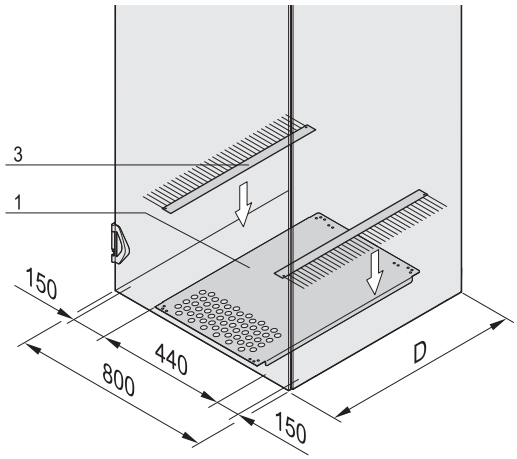

01006062

Cabinet width 800 mm

- The base plate is open on the side; the opening can be covered with a brush strip (cabinet width 600 mm) or two brush strips (cabinet width 800 mm)
- Perforated at front for better heat dissipation

DELIVERY INCLUDES

Item	Qty	Description
1	1	Base plate, St, 1.5 mm, width 440 mm, RAL 7021
2	1	Assembly kit

ORDER INFORMATION

For cabinet width W mm	Depth D mm	Part No.
600 / 800	600	23130-378
600 / 800	800	23130-353
600 / 800	900	23130-354
600 / 800	1000	23130-355
600 / 800	1200	23130-357
Item 3 Brush strip for base plate, for lateral cable ducting, cabinet depth 600 mm, 200 mm wide, incl. assembly kit, 1 piece		**23130-074**
Item 3 Brush strip for base plate, for lateral cable ducting, cabinet depth 800 mm, 200 mm wide, incl. assembly kit, 1 piece		**23130-134**
Item 3 Brush strip for base plate, for lateral cable ducting, cabinet depth 900 mm, 200 mm wide, incl. assembly kit, 1 piece		23130-374
Item 3 Brush strip for base plate, for lateral cable ducting, cabinet depth 1000 mm, 200 mm wide, incl. assembly kit, 1 piece		23130-375
Item 3 Brush strip for base plate, for lateral cable ducting, cabinet depth 1200 mm, 200 mm wide, incl. assembly kit, 1 piece		23130-377

NOTE

- Is assembled from inside
- Please order cover plate, brush strip or filter mat separately

STATIONARY BASE/PLINTH

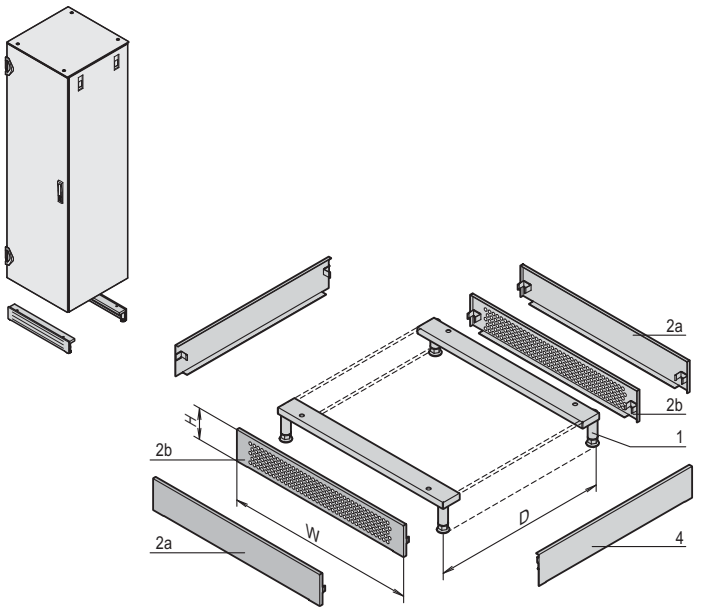

D = cabinet depth

- Static load-carrying capacity 1000 kg
- Removable trims allow cable entry from all sides
- Cannot be used in conjunction with castors
- Plinth height 100 mm, with feet adjustable from 112 to 132 mm
- Versions
  - Front/rear trim perforated
  - Front/rear trim, solid

DELIVERY INCLUDES ((kit))

Item	Qty	Description
1	2	Support with feet, St, 3 mm
2a	2	Solid trim, St, 1.5 mm, RAL 7021
2b	2	Perforated trim, St, 1.5 mm, RAL 7021
3	1	Assembly kit

ORDER INFORMATION

For cabinet width W mm	Front/rear trim	Part no.
600	perforated	**23130-187**
600	solid	23130-387
800	perforated	**23130-194**
800	solid	23130-388
Item 4 Side trim height 100 mm, depth 600 mm, PU 2 pieces		**23130-169**
Item 4 Side trim height 100 mm, depth 800 mm, PU 2 pieces		**23130-170**
Item 4 Side trim height 100 mm, depth 900 mm, PU 2 pieces		23130-171
Item 4 Side trim St, 1.5 mm, height 100 mm, depth 1000 mm, PU 2 pieces		**23130-172**
Item 4 Side trim St, 1.5 mm, height 100 mm, depth 1200 mm, PU 2 pieces		23130-363

NOTE

- Please order side trims (item 4) separately

MOBILE BASE/PLINTH

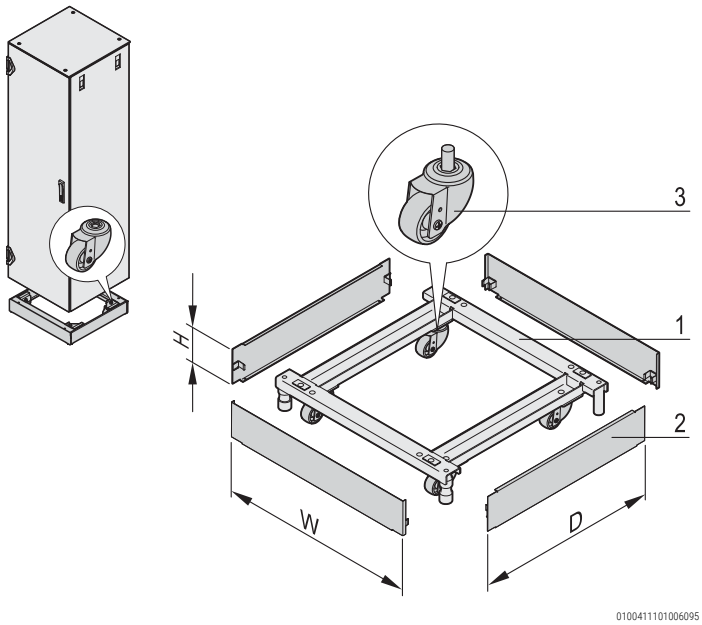

- Load-carrying capacity on castors 400 kg, on adjustable feet 1000 kg
- Plinth height H = 100 mm, with feet adjustable from 126 to 134 mm

DELIVERY INCLUDES

Item	Qty	Description
1	1	Frame, St, 3 mm, RAL 7021, with adjustable feet
2	4	Trim, St, 1.5 mm, RAL 7021
3	4	Castor
4	1	Assembly kit

ORDER INFORMATION

For cabinet width W mm	For cabinet depth D mm	Part No.
600	600	23130-208
600	800	**23130-209**
600	900	23130-210
600	1000	23130-211
600	1200	23130-369
800	600	23130-212
800	800	23130-213
800	900	23130-214
800	1000	23130-215
800	1200	23130-371

Part number in bold face type: ready for shipping within 2 working days
Part number in normal type: ready for shipping within 10 working days

TELESCOPIC TIP-OVER PROTECTION

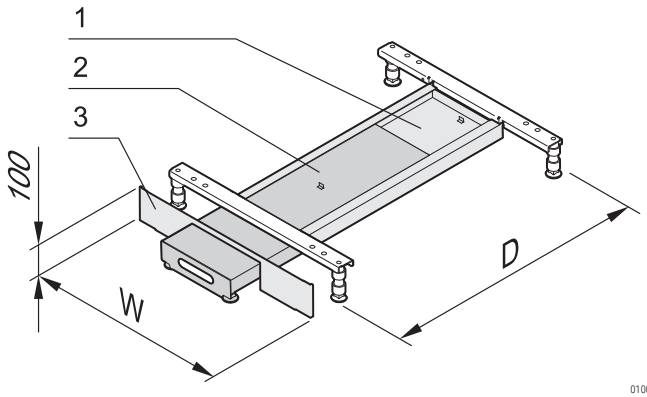

01006054

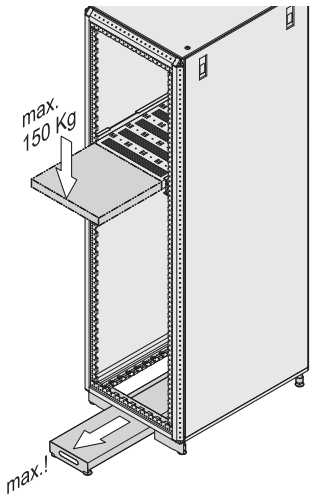

01006058

- Max. 150 kg at full extension
- Lateral and rear cable entry possible

DELIVERY INCLUDES

Item	Qty	Description
1	1	Guide plate for tilt protection, St, 2 mm, AlZn
2	1	Tilt protection, St, 2 mm, RAL 7021, with 2 adjustable feet
3	1	Bezel, St, 1.5 mm, RAL 7021
4	1	Assembly kit

ORDER INFORMATION

For cabinet width W mm	For cabinet depth D mm	Part No.
600	900	23130-345
600	1000	23130-346
600	1200	23130-348
800	900	23130-349
800	1000	23130-350
800	1200	23130-352

NOTE

- Only for use in conjunction with plinth or mobile plinth

TIP-OVER PROTECTION FOR FLOOR MOUNTING

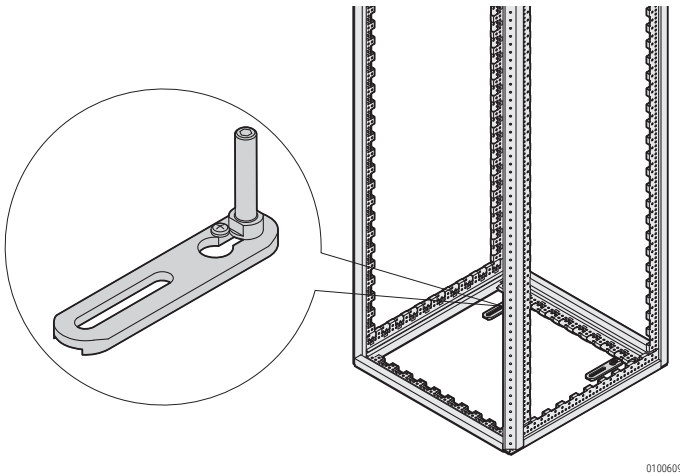

01006091

- For fixing to the floor
- Height adjustable by integrated adjustable feet
- Assembly possible on frame or base/plinth

DELIVERY INCLUDES

Item	Qty	Description
1	2	Mounting plate, Al
2	2	Adjustable foot with outside thread

ORDER INFORMATION

Description	Part No.
Tip-over protection for floor mounting	**23130-386**

19" PANEL/SLIDE MOUNTS WITH UNIVERSAL PITCH (EIA)

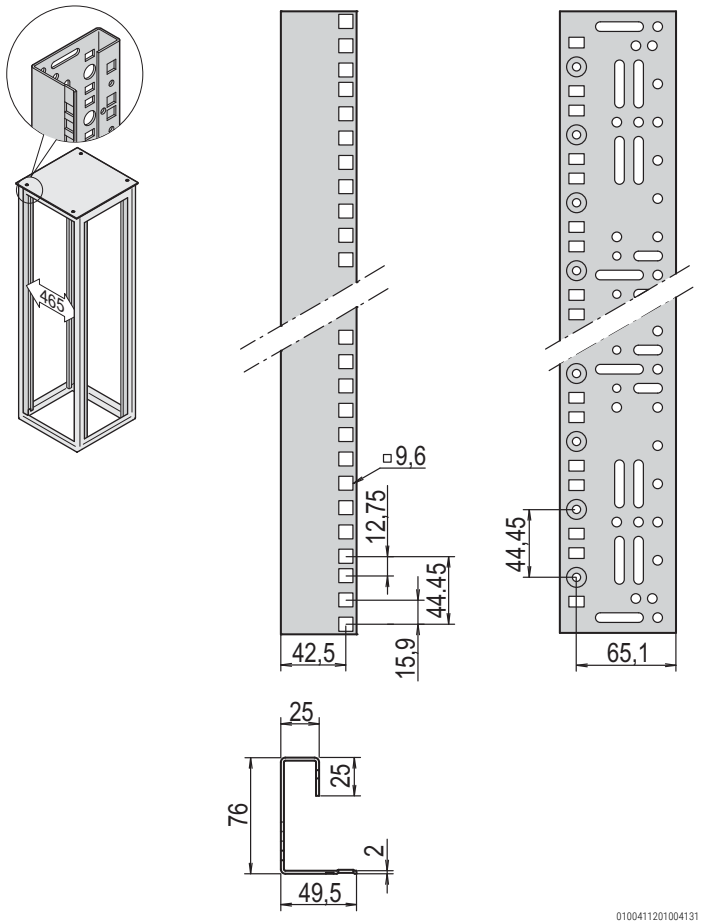

- Assembly in 600 mm wide cabinets directly on the frame
- Depth-adjustable in 25 mm increments
- In accordance with IEC 60297-1 (DIN 41 494, part 1)

DELIVERY INCLUDES

Item	Qty	Description
1	2	19" panel/slide mount, St, 1.75 mm, finish Al-Zn, RAL 7035 or RAL 7021
2	1	Assembly kit, incl. GND/earthing

ORDER INFORMATION

For cabinet height	Usable height	Length	AlZn	RAL 7035	RAL 7021
mm	U	mm	Part No.	Part No.	Part No.
Partial-height mounting	8	395	**23130-037**	**23130-027**	**23130-017**
	12	545	**23130-038**	**23130-028**	**23130-018**
	16	745	**23130-039**	**23130-029**	23130-019
	20	895	**23130-040**	**23130-030**	**23130-020**
	24	1095	**23130-031**	**23130-021**	**23130-011**
	29	1295	**23130-032**	**23130-022**	**23130-012**
	33	1495	**23130-033**	**23130-023**	**23130-013**
	38	1695	**23130-034**	**23130-024**	**23130-014**
2000	42	1895	**23130-035**	**23130-025**	**23130-015**
2200	47	2095	**23130-036**	**23130-026**	**23130-016**

Accessories

Adaptor bracket for reduced width for mounting of panel/slide mounts in 800 mm wide cabinets, St, 2 mm, AlZn, PU 4 pieces	**23130-091**
Heavy-load cross member Length 1000 mm, PU 4 pieces	23130-572
Heavy-load cross member Length 1100 mm, PU 4 pieces	23130-573
Heavy-load cross member Length 1200 mm, PU 4 pieces	23130-574
Dimensioning strip for 19" panel mounts, paper, white, serial numbered from 1 ... 47 U, PU 4 pieces	**25127-997**

NOTE

- Please order adaptor bracket for reduced width for 800 mm wide cabinets separately
- For 19" partial-height mounting, depth members are required
- Metric panel/slide mounts available on request

Part number in bold face type: ready for shipping within 2 working days
Part number in normal type: ready for shipping within 10 working days

DEPTH MEMBERS

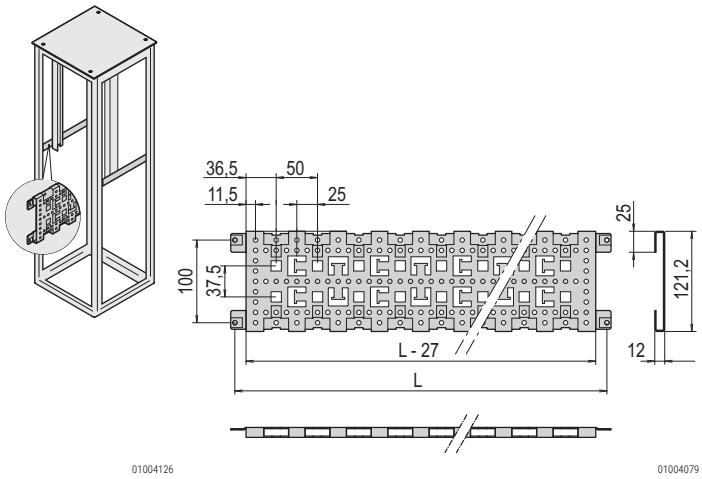

- For mounting of shortened 19" panel/slide mounts
- Cable ducting by means of cable ties and cable eyes

DELIVERY INCLUDES

Item	Qty	Description
1	2	Depth member, St, 1.5 mm, finish AlZn
2	1	Assembly kit incl. GND/earthing

ORDER INFORMATION

For cabinet depth mm	Length L mm	Part No.
600	460	**23130-081**
800	660	**23130-082**
900	760	**23130-083**
1000	860	**23130-084**
1200	1060	**23130-365**
Cable eye A = 38 mm, B = 25 mm, PU 25 pieces		**21101-151**
Cable eye A = 47 mm, B = 50 mm, PU 25 pieces		**21101-150**

NOTE

- Cable ducting with cable ties see page 1.165

Cable eye

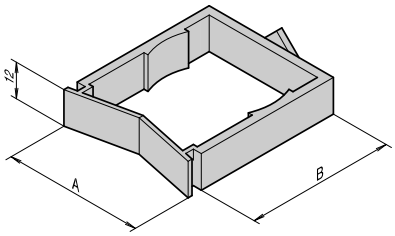

19" ASSEMBLY KIT, M6

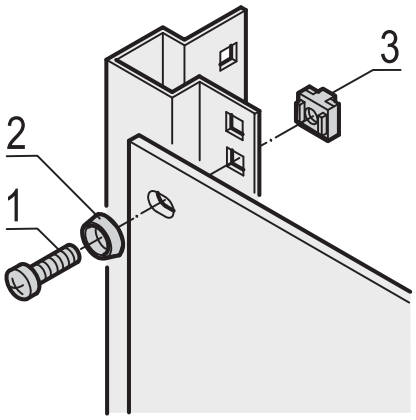

- For front panels, distribution fields and other components

DELIVERY INCLUDES

Item	Description
1	Panhead screw, M6 x 16, St, zinc-plated
2	Plastic washer, black
3	Cage nut, M6, St, zinc-plated

ORDER INFORMATION

Description	Qty/PU	Part No.
19" assembly kit (screw, washer, nut)	50	**21101-809**
19" assembly kit (screw, washer, nut)	100	**21101-810**

SLIDE RAILS

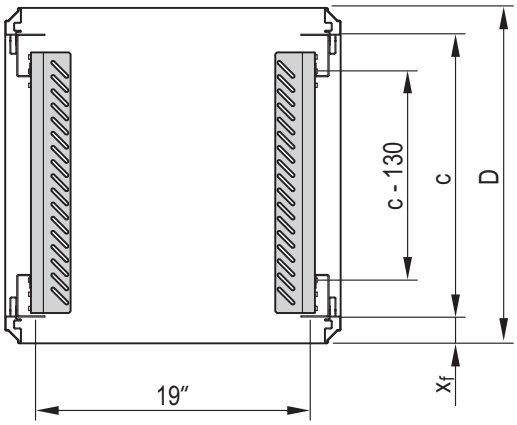

01004130

c = pitch of the 19" panel/slide mounts
x_f = standard dimension
D = cabinet depth

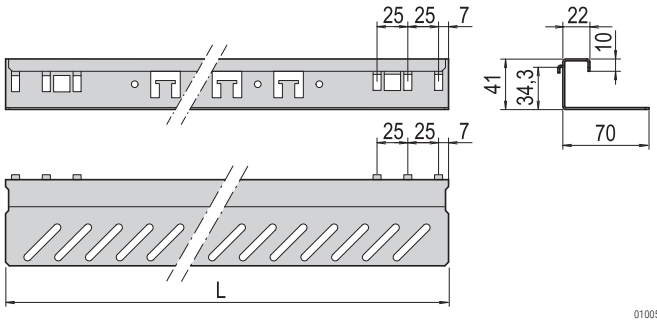

01005086

Static load-carrying capacity 25 kg

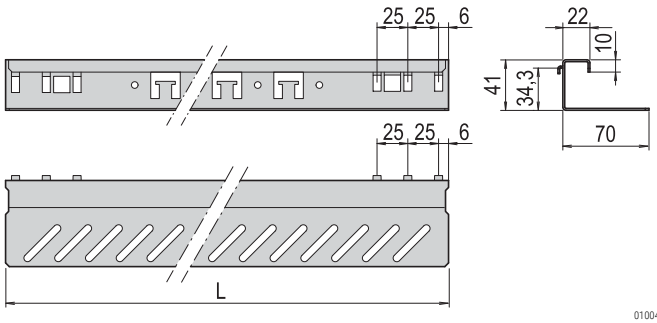

01004058

Static load-carrying capacity 100 kg

- For assembly on 19" panel/slide mounts
- Assembly in 1 U increments (snap-in, bolt-on)
- Wide support surface (48 mm)
- 2 versions
  - Static load-carrying capacity 25 kg per pair
  - Static load-carrying capacity 100 kg per pair

DELIVERY INCLUDES

Item	Qty	Description
1	see Order information	Slide rail, AlZn, 1.5 mm (static load-carrying capacity 25 kg), or 2.5 mm (static load-carrying capacity 100 kg), zinc-plated
2	1	Assembly kit incl. GND/earthing

ORDER INFORMATION

Static load-carrying capacity 25 kg

For cabinet depth mm	xf mm	C mm	Length L mm	Qty/PU	Part No.
600, 800	50	500, 700	456	2	**23130-096**
600, 800	50	500, 700	456	10	**23130-101**
800	150	500	456	2	**23130-096**
800	150	500	456	10	**23130-101**
900, 1000, 1200	70	740	699	2	**23130-098**
900, 1000, 1200	70	740	699	10	**23130-103**

ORDER INFORMATION

Static load-carrying capacity 100 kg

For cabinet depth mm	xf mm	C mm	Length L mm	Qty/PU	Part No.
600, 800	50	500, 700	458	2	**23130-118**
600, 800	50	500, 700	458	10	**23130-123**
800	150	500	458	2	**23130-118**
800	150	500	458	10	**23130-123**
900, 1000, 1200	70	740	699	2	**23130-120**
900, 1000, 1200	70	740	699	10	**23130-125**

SHORT SLIDE RAILS

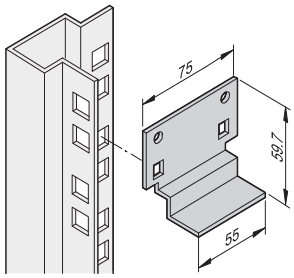

sc96xxxx

- Support for heavy 19" chassis
- To attach on 19" slide mounts
- Static load-carrying capacity max. 15 kg per pair

DELIVERY INCLUDES

Item	Qty	Description
1	2 / 10	Short slide rail, St, 1.5 mm, finish AlZn
2	1	Assembly kit

ORDER INFORMATION

Description	Qty/PU	Part No.
Short slide rails	2	**23130-094**
Short slide rails	10	**23130-095**

Part number in bold face type: ready for shipping within 2 working days
Part number in normal type: ready for shipping within 10 working days

19" STATIONARY SHELF, 75 KG

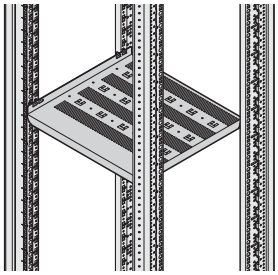

01004066

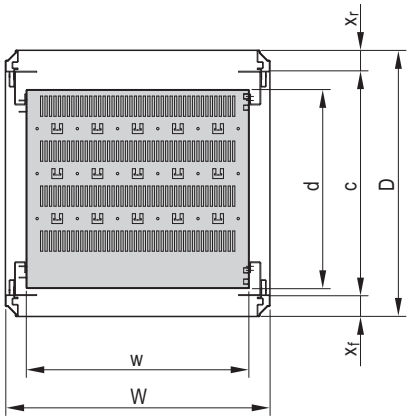

01004067

c = max. pitch of the 19" slide mounts
x_f, x_r = standard assembly dimension

- Static load-carrying capacity 75 kg (150 kg with strengthening rail)
- Mounting height 1 U, for mounting on four panel/slide mounts
- With hammer head perforation to fix cable ties

DELIVERY INCLUDES

Item	Qty	Description
1	1	Perforated shelf, St, 1.5 mm (colour see Order Information)
2	1	Assembly kit incl. GND/earthing

ORDER INFORMATION

For cabinet depth mm	Usable surface w x d mm	xf mm	C mm	RAL 7035 Part No.	RAL 7021 Part No.
600	495 x 442	50	500	**22130-303**	**21130-303**
800	495 x 442	150	500	**22130-303**	**21130-303**
900	495 x 682	70	740	**22130-309**	**21130-309**
1000	495 x 682	70	740	**22130-309**	**21130-309**
1200	495 x 682	70	740	**22130-309**	**21130-309**
Strengthening rail for stationary 19" shelf, PU 1 piece				PU 1 piece	**23130-310**

NOTE

- Cable ducting with cable ties see page 1.165
- Other sizes see ServicePLUS page 1.167

19" SHELF, STATIONARY, DEPTH-ADJUSTABLE, 1 U

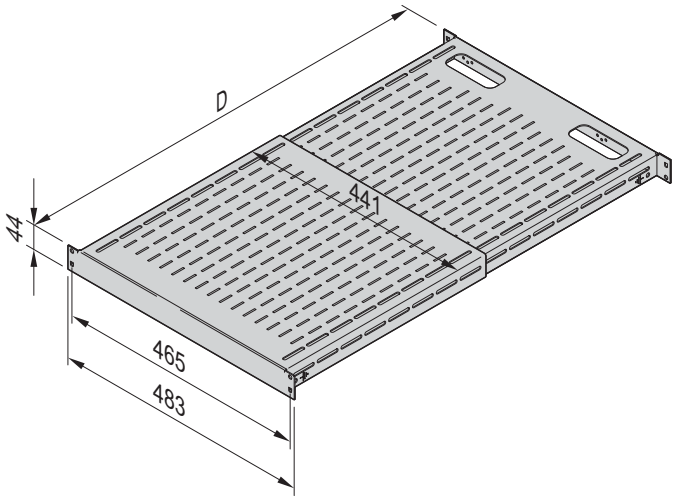

89073664

- Static load-carrying capacity 68 kg
- Mounting height 1 U
- For mounting on four 19" posts or four 19" panel/slide mounts
- Depth-adjustable mounting dimension from 19" bracket to 19" bracket
- 2 versions
  - Mounting dimensions 495 ... 851 mm
  - Mounting dimensions 792 ... 1151 mm
- 2 oval cut-outs for cable ducting
- Colour black, RAL 9005

DELIVERY INCLUDES

Item	Qty	Description
1	1	Shelf, depth-adjustable, width 19", RAL 9005 (black); Shelf is suspended on 19" upright or 19" panel/slide mounts
2	1	Fitting materials with user manual

ORDER INFORMATION

19" shelf, stationary, depth-adjustable, 1 U	Part no.
Mounting dimensions D 495 ... 851 mm	**D19FVT69B**
Mounting dimensions D 792 ... 1151 mm	**D19FVT912B**

NOTE

- 19" assembly kit see page 1.146

19" TELESCOPIC SHELF, 30 KG

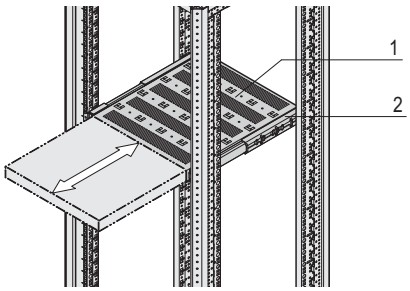

01004068

- Static load-carrying capacity at full extension 30 kg
- Mounting height 1 U, for mounting on four 19" panel/slide mounts
- Incl. telescopic slides
- Hammer head perforation to fix cable ties
- 2 versions
  - Full depth
  - Depth shortened by 100 mm for rear cable ducting

DELIVERY INCLUDES

Item	Qty	Description
1	1	Perforated shelf, St, 1.5 mm (colour see Order Information)
2	2	Telescopic slide
3	1	Assembly kit

Full depth

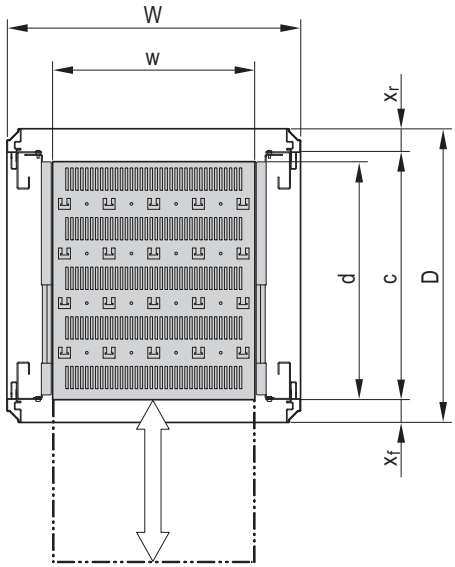

01004069

ORDER INFORMATION

Full depth

For cabinet depth	Usable surface w x d	xf	C	RAL 7035	RAL 7021
mm	mm	mm	mm	Part No.	Part No.
600	417 x 482	50	500	**22130-343**	**21130-343**
800	417 x 482	150	500	**22130-343**	**21130-343**
GND/earthing for telescopic 19" shelf PU 1 kit, for Varistar					**23130-140**

NOTE

- Cable ducting with cable ties see page 1.165

Shortened depth

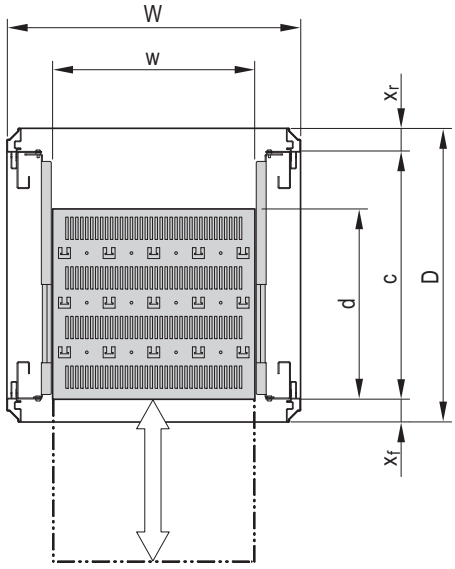

01004070

ORDER INFORMATION

Shortened by 100 mm

For cabinet depth	Usable surface w x d	xf	C	RAL 7035	RAL 7021
mm	mm	mm	mm	Part No.	Part No.
600	417 x 382	50	500	**22130-342**	**21130-342**
800	417 x 382	150	500	**22130-342**	**21130-342**
GND/earthing for telescopic 19" shelf PU 1 kit, for Varistar					**23130-140**

NOTE

- Cable ducting with cable ties see page 1.165

c = max. pitch of the 19" panel/slide mounts
x_f, x_r = standard assembly dimension

Part number in bold face type: ready for shipping within 2 working days
Part number in normal type: ready for shipping within 10 working days

19" TELESCOPIC SHELF, 70 KG

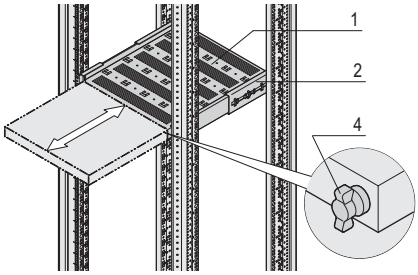

01004071

- Static load-carrying capacity at full extension 70 kg
- Mounting height 2 U, for mounting on four 19" panel/slide mounts
- Incl. telescopic slides
- Locking with T-bar lock possible
- Hammer head perforation to fix cable ties
- 2 versions
  - Full depth
  - Depth shortened by 100 mm for rear cable ducting

Full depth

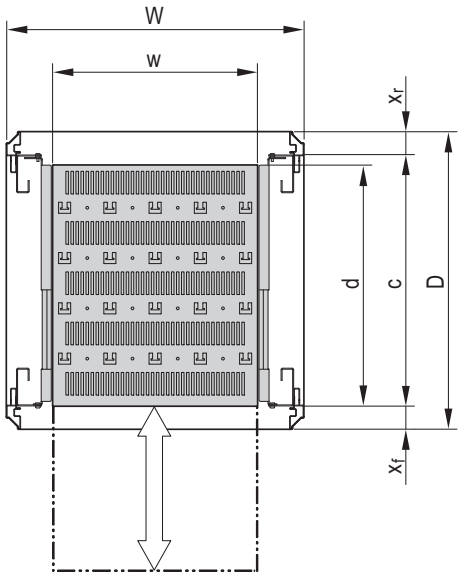

01004069

c = max. pitch for 19" panel/slide mounts

Shortened depth

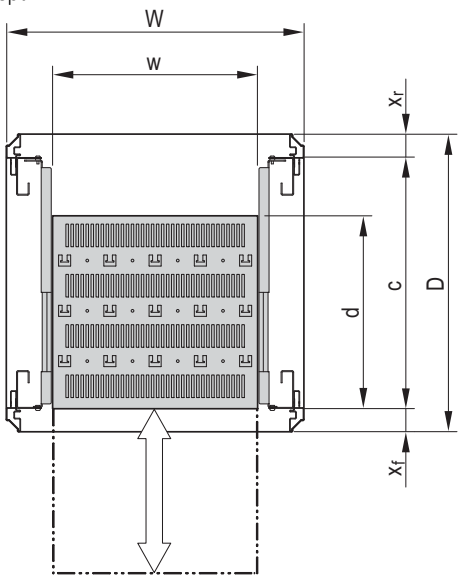

01004070

c = max. pitch of the 19" panel/slide mounts
x_f, x_r = standard assembly dimension

DELIVERY INCLUDES

Item	Qty	Description
1	1	Perforated shelf, St, 1.5 mm (colour see Order Information)
2	2	Telescopic slide
3	1	Assembly kit

ORDER INFORMATION

Full depth

For cabinet depth	Usable surface w x d	xf	C	RAL 7035	RAL 7021
mm	mm	mm	mm	Part No.	Part No.
600	405 x 482	50	500	**22130-353**	**21130-353**
800	405 x 482	150	500	**22130-353**	**21130-353**
Item 4 T-bar lock for 1 telescopic shelf (can be mounted right or left), 1 piece					**23130-092**
GND/earthing for telescopic 19" shelf PU 1 kit, for Varistar					**23130-140**

NOTE

- Please order T-bar lock (item 4) separately
- Cable ducting with cable ties see page 1.165

ORDER INFORMATION

Shortened by 100 mm

For cabinet depth	Usable surface w x d	xf	C	RAL 7035	RAL 7021
mm	mm	mm	mm	Part No.	Part No.
600	405 x 382	50	500	22130-352	**21130-352**
800	405 x 382	150	500	22130-352	**21130-352**
Item 4 T-bar lock for 1 telescopic shelf (can be mounted right or left), 1 piece					**23130-092**
GND/earthing for telescopic 19" shelf PU 1 kit, for Varistar					**23130-140**

NOTE

- Please order T-bar lock (item 4) separately
- Cable ducting with cable ties see page 1.165

LEVER HANDLE FOR SINGLE POINT LOCKING



01005016

- For installation instead of key lock insert
- To open press push-button
- DIN profile half cylinder retrofittable

DELIVERY INCLUDES

Item	Qty	Description
1	1	Lever handle for single point locking
2	1	Assembly kit

ORDER INFORMATION

Description	Part No.
Lever handle for single point locking	**23130-067**
Accessories	
DIN profile half cylinder, common locking for lever handle (1 key type 333 fits all locks) incl. 2 keys	**25127-995**
DIN profile half cylinder, common locking for lever handle (1 key type 2233 fits all locks) incl. 2 keys	**60130-402**

NOTE

- Other locks such as ASSA, KABA or RONIS available on request

ELECTRONIC CLOSING (STAND-ALONE)



41003035

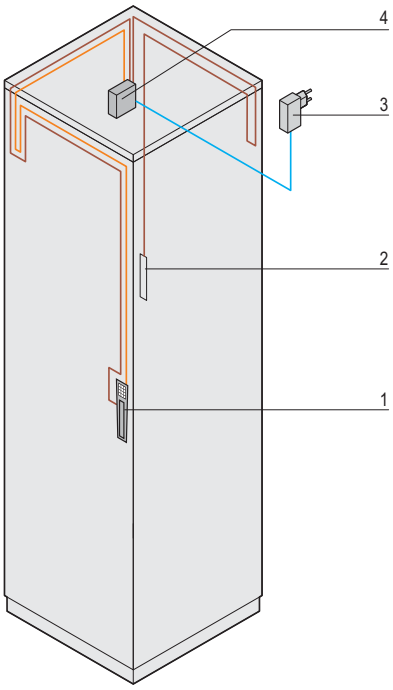

01007054

- Complete package comprising a handle with keyboard (master) and a handle with opening function (slave) plus all necessary electrical connection components
- Suitable for all Varistar cabinet doors with 1 point or 3 point locking and S2100 door handle cut-out
- Front and rear door can be opened together or separately by means of coding

DELIVERY INCLUDES (Kit)

Item	Qty	Description
1	1	Electronic lever handle with keyboard (master) for front door, 4 m connecting cable and ferrules
2	1	Electronic lever handle, opener (slave) only, for rear door, 4 m connecting cable and ferrules
3	1	Plug-in power supply AC/DC with Euro plug, input voltage 100 V_{AC} ... 230 V_{AC}, output voltage 12 V_{DC} /700 mA
4	1	Central unit with case
5	1	Cable ducting
6	1	Assembly kit, operating instructions

ORDER INFORMATION

Description	Part no.
Electronic closing	20130-598

Part number in bold face type: ready for shipping within 2 working days
Part number in normal type: ready for shipping within 10 working days

ELECTRONIC CLOSING (MLR3000), 13.56 MHZ-MIFARE



01013014

- Electronic door handles for Varistar cabinets
- Modular solution with electronic door locking, reader unit, PSU and administration software
- Integrated visualization, LED display for alarm signals and operating statuses
- Two locking options: stand-alone and networked
- Access reporting and user management
- Sabotage and vandalism alarm

DELIVERY INCLUDES

Item	Qty.	Description
1a	1	Electronic door lock MLR 3000 with lever handle and card reader unit; Display with status LEDs; reader (125 kHz HDI or 13.56 MHz MIFARE on request)
1b	1	Card reader unit (supply voltage 12 V_{DC}, 40 mA (max. 440 mA); Temperature range -20 ... +70 °C
1c	1	Junction (distribution box)

ORDER INFORMATION

Description	Qty/PU piece	Part no.
Electronic closing (MLR3000), 125 kHz-HDI	1	23130-513
Electronic closing (MLR3000), 13.56 MHz-MIFARE	1	23130-565
Accessories		
 Electronic door lock MLR1000 (slave), 1 piece		23130-512
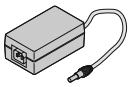 PSU for electronic locking 1 piece		23130-515
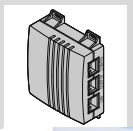 Gateway for electronic door lock 1 piece		23130-523
 Administration Suite Software 1 piece		60130-680
 Reader cards for electronic locking (125 KHz-HDI) PU 10 pieces		23130-526
Reader cards for electronic locking (13.56 MHz MILFARE) PU 10 pieces		23130-566
 HID stand-alone function cards (125 KHz-HDI) PU 4 pieces		60130-678
HID stand-alone function cards (13.56 MHz, MIFARE)PU 4 pieces		60130-832
 Battery pack for electronic locking 1 piece		60130-729
 Desktop reader (125 KHz-HDI) 1 piece		60130-730
Desktop Reader (13.56 MHz-MIFARE) 1 piece		60130-830

Cabinets – Varistar Datacom/Networking

TWO LOCKING OPTIONS: STAND-ALONE AND NETWORKED

Stand-alone solution:
- Lever handle with HID 125 kHz reader unit (Mifare on request)
- Reader cards are set up and issued directly on handle using the HID standalone function cards

Networked solution:
- Access is managed centrally via the network
- Reader cards are issued via the management software
- The Gateway allows up to 32 door handles to be controlled

Stand-alone solution

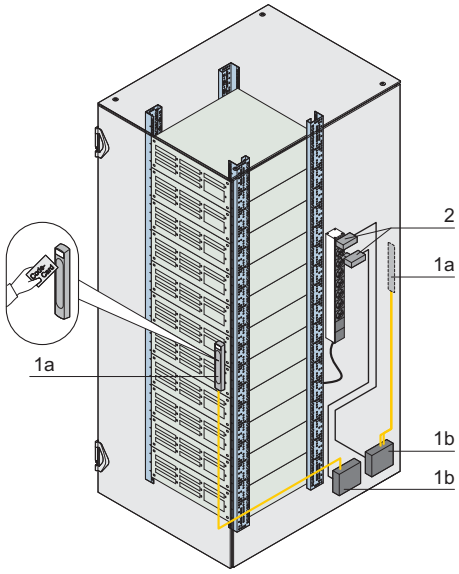

01014051

Required number of components for one cabinet with front and rear door (standalone solution)

Item	Description	Required number Piece	Order no.
1a 1b	Electronic door lock MLR3000 Stand-alone card reader unit	2	23130-513
2	Power supply unit for door lock	2	23130-515
	Cards (set of 10)	1	23130-512
	HID stand-alone function cards	1	60130-678
	Battery pack (optional)	1	60130-729

Networked solution

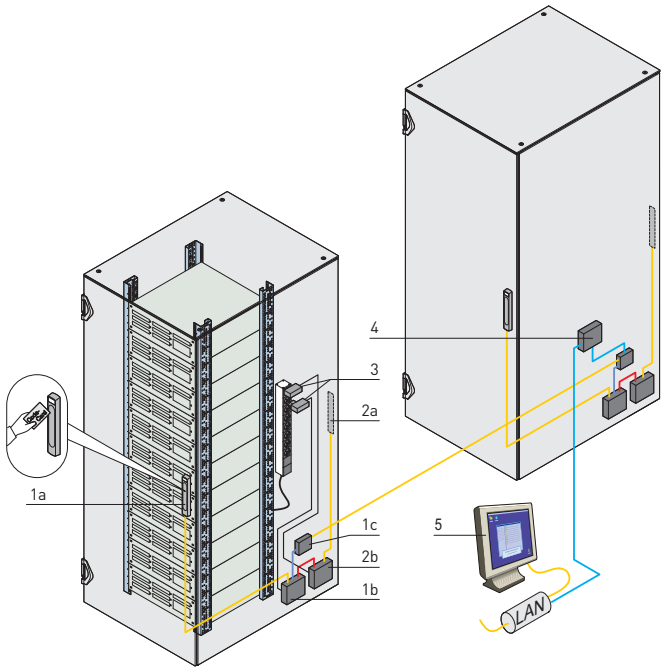

01014052

Required number of components for two cabinets with front and rear door (networked solution)

Item	Description	Required number Piece	Order no.
1a 1b 1c	Electronic door lock MLR3000 Card reader unit Junction	2	23130-513
2a 2b	Electronic door lock MLR1000 Junction	2	23130-512
3	PSU for door lock/gateway	5	23130-515
4	Gateway for electronic door lock	1	23130-523
5	Access management software, administration suite via network	1	23130-680
	Cards (set of 10)	1	23130-526
	Desktop reader (optional)	1	60130-730
	Battery pack (optional)	1	60130-729

Part number in bold face type: ready for shipping within 2 working days
Part number in normal type: ready for shipping within 10 working days

ELECTRONIC DOOR LOCK MLR1000



01013014

- Electronic door handles for Varistar cabinets
- Integrated visualization, LED display for alarm signals and operating statuses
- Lever handle opens when switch contacts touch

DELIVERY INCLUDES

Item	Qty	Description
1a	1	Electronic door lock MLR1000 with lever handle, display with multicolor status LED
1b	1	Junction (distribution box), power supply via 12 V_{DC} socket, 40 mA (max. 440 mA); temperature range -20 ... +70 °C

ORDER INFORMATION

Description	Qty/PU piece	Part no.
Electronic door lock MLR1000	1	23130-512
Accessories		
PSU for electronic locking 1 piece		23130-515

BATTERY PACK FOR ELECTRONIC LOCKING



01014001

- Battery pack allowing emergency opening of lever handle (MLR 3000) in event of power failure
- Power is supplied to the lever handle from outside and below, allowing the door to then be opened using an authorized access card

DELIVERY INCLUDES

Item	Qty	Description
1	1	Battery pack, 12 V, width 145 mm, height 72 mm, depth 34 mm

ORDER INFORMATION

Description	Qty/PU piece	Part no.
Battery pack for electronic locking	1	60130-729

PSU FOR ELECTRONIC LOCKING

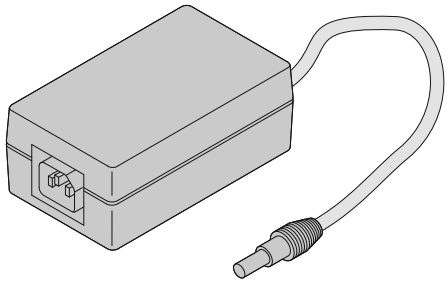

01014054

- Power adapter to supply lever handle (MLR 3000, MLR1000) and gateway

DELIVERY INCLUDES

Item	Qty	Description
1	1	Power adapter, 230 V_{AC} (IEC 60320-C13 plug), 12 V_{DC}, (cable length 1230 mm)

ORDER INFORMATION

Description	Qty/PU piece	Part no.
PSU for electronic locking	1	23130-515
Accessories		
Mains cable, IEC IEC 60320 C14 plug, IEC 60320 C13 socket, 2.5 m, 1 piece		**60197-053**
Mains cable, BS British Standard plug, IEC 60320 C13 socket, 2.5 m, 1 piece		**60103-137**
Mains cable, SCHUKO/UTE SCHUKO/UTE plug, IEC 60320 socket, 2.5 m, 1 piece		**62150-191**

READER CARDS FOR ELECTRONIC LOCKING (125 KHZ-HDI)

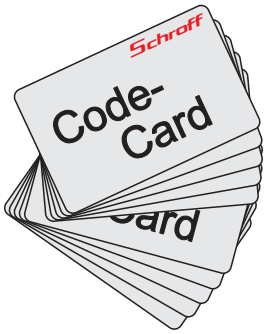

12514051

- Reader cards for electronic locking (MLR3000)

DELIVERY INCLUDES

Item	Qty.	Description
1	10	Reader card for reader unit

ORDER INFORMATION

Description	Qty/PU	Part no.
Reader cards for electronic locking (125 KHz-HDI)	PU 10 pieces	23130-526
Reader cards for electronic locking (13.56 MHz MILFARE)	PU 10 pieces	23130-566

HID STAND-ALONE FUNCTION CARDS (125 KHZ-HDI)



12514050

- Code cards for programming standalone locking

DELIVERY INCLUDES

Item	Qty.	Description
1	1	Card (unlocking card)
2	1	Card (locking card)
3	1	Card (group card)
4	1	Card (general card)
5	1	User manual

ORDER INFORMATION

Description	Qty/PU	Part no.
HID stand-alone function cards (125 KHz-HDI)	PU 4 pieces	60130-678
HID stand-alone function cards (13.56 MHz, MIFARE)	PU 4 pieces	60130-832

Part number in bold face type: ready for shipping within 2 working days
Part number in normal type: ready for shipping within 10 working days

ACCESS MANAGEMENT SOFTWARE, ADMINISTRATION SUITE



01014004

- The Administration Suite enables you to document and protect all access to indoor cabinets and enclosures. You have complete control and also have a high level of flexibility
- Alarm management, the possibility of managing systems in different time zones and managing different installations
- Flexibility, a clear overview and user-friendly design make this software easy to use and an effective management system for data and server cabinets protected with E-LINE by DIRAK
- The integrated web client lets you link any number of users with the administration suite via a web browser. Any device with a browser function (iPad®, tablet computers, iPhone®, Blackberry® etc.) can operate the web client of the administration suite without additional software installation

DELIVERY INCLUDES

Item	Qty	Description
1	1	CD with software and documentation

ORDER INFORMATION

Description	Qty/PU piece	Part no.
Administration Suite Software	1	60130-680

DESKTOP READER (125 KHZ-HDI)



01014002

- Card reader unit for networked solution
- Centralized allocation of reader cards using administration suite software

DELIVERY INCLUDES

Item	Qty.	Description
1	1	Desktop reader, width 107.5 mm, depth 108.5 mm, height 23.75 mm
2	1	USB connecting cable, length 1800 mm

ORDER INFORMATION

Description	Qty/PU piece	Part no.
Desktop reader (125 KHz-HDI)	1	60130-730
Desktop Reader (13.56 MHz-MIFARE)	1	60130-830

GATEWAY FOR ELECTRONIC LOCKING

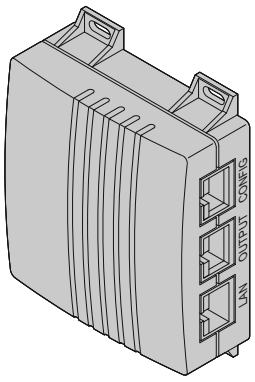

01014053

- Connects to Ethernet network

DELIVERY INCLUDES

Item	Qty	Description
1	1	Gateway, width 75 mm, depth 70 mm, height 29 mm

ORDER INFORMATION

Description	Qty/PU piece	Part no.
Gateway for electronic door lock	1	23130-523
Accessories		
PSU for electronic locking 1 piece		23130-515

ZONE 1 CABLE MANAGEMENT

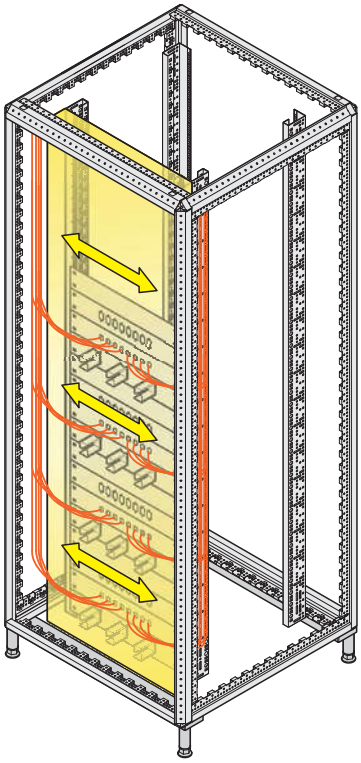

01006087

- Cable ducting zone 1 is located in the front area of the cabinet, in front of the 19" plane
- In this zone the patch cables are ducted horizontally between the distribution fields

PRODUCTS

- Cable ducting see chapter Cabinet accessories, from page

ZONE 2 CABLE MANAGEMENT

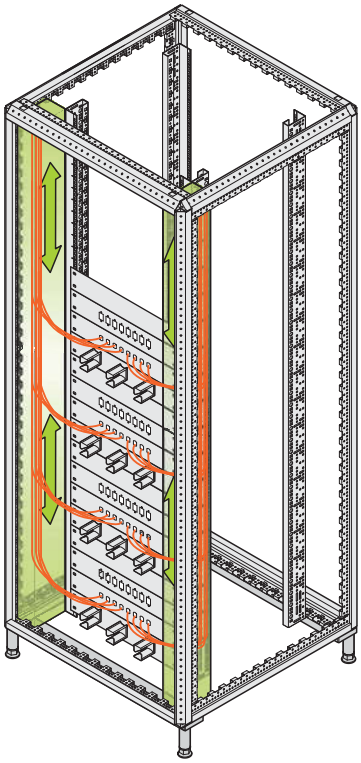

01006088

- The cable ducting zone 2 is located on the right and left hand side in the front area of the cabinet, next to the 19" plane
- The patch cables are ducted in a kind of channel to the individual distribution fields and components

PRODUCTS

- Cable eyes see from page 1.158
- Cable brackets for fiber optic cables, see page 1.158
- Shielding panel, see page 1.159

CABLE EYE, PLASTIC

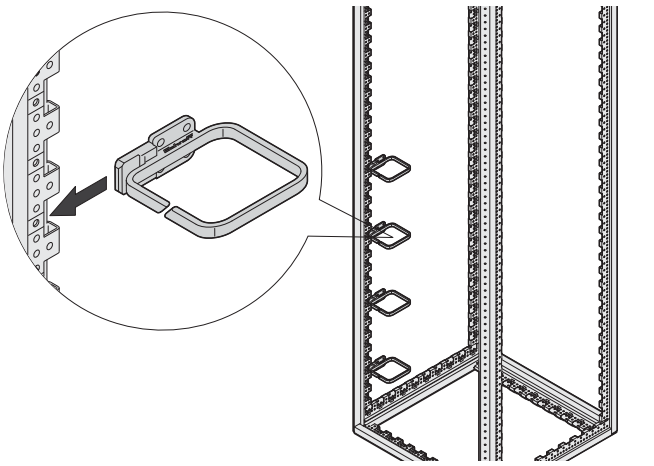

Illustration shows application (W, D = 100 mm)

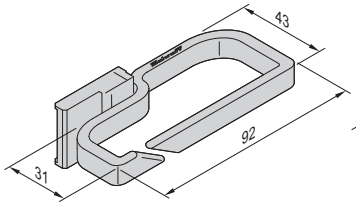

W = 31 mm, D = 92 mm

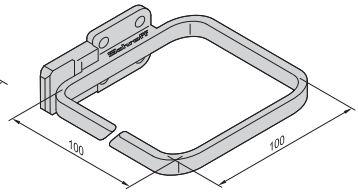

W, D = 100 mm

- For mounting on cabinet uprights on 600 or 800 mm wide cabinets
- Simple and fast assembly by clicking into the cabinet profile (without assembly kit)
- Cable ducting laterally in front of the 19" panel/slide mount
- With additional assembly kit also suitable for lateral assembly on the 19" panel/slide mounts

DELIVERY INCLUDES

Item	Qty	Description
1	4	Cable eye, PA, UL 94 V-0, black

ORDER INFORMATION

For cabinet width mm	W mm	D mm	Part no.
600	31	92	**23130-506**
800	100	100	**23130-336**
Accessories			
Taptite screw M6 Taptite, PU 50 pieces			**23130-285**

CABLE EYE, STEEL

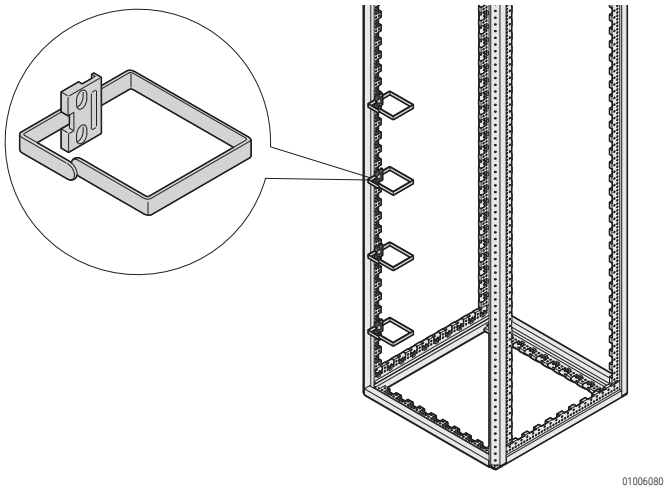

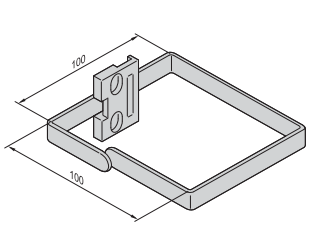

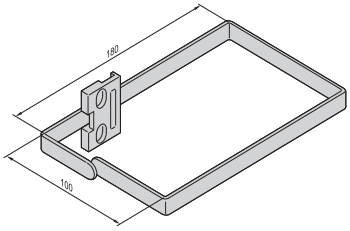

- For assembly on cabinet uprights (800 mm cabinet width) or laterally to the 19" panel/slide mounts
- Cable ducting laterally next to and/or in front of the 19" panel/slide mounts

DELIVERY INCLUDES

Item	Qty	Description
1	4	Bracket, St, zinc-plated,
2	4	Terminal, Al, die-cast
3	1	Assembly kit

ORDER INFORMATION

For cabinet width mm	W mm	D mm	Part No.
800	100	100	**23130-341**
800	100	180	**23130-342**

FIBER OPTIC CABLE DUCTING

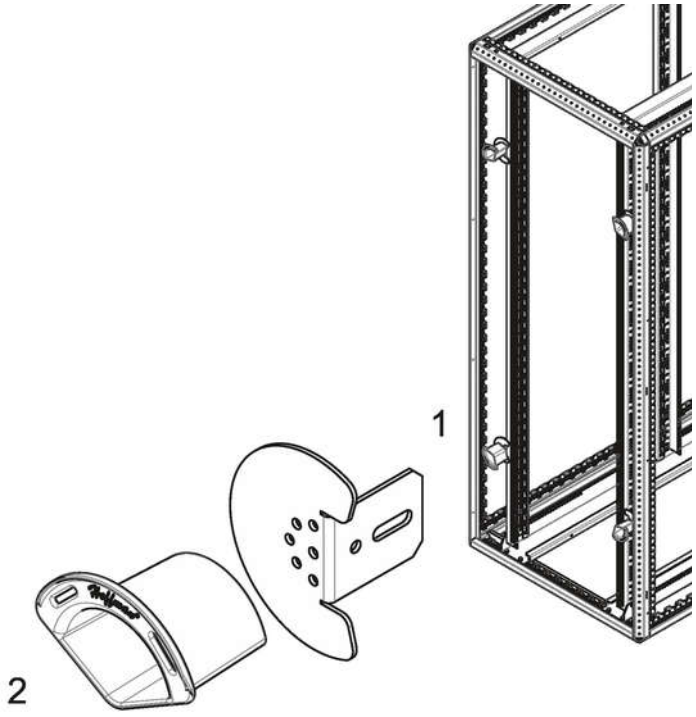

01017051 01017050

- For secure, damage-free laying of optic fiber cables
- For assembly on 19" panel/slide mount
- Mounted from inside or outside on panel/slide mount

DELIVERY INCLUDES

Item	Qty.	Description
1	4	Optic fiber cable ducting holder, St, powder-coated, RAL 7021
2	4	Optic fiber cable ducting, PA, UL 94 V-0, dimensions: radius 30 mm, width 50 mm, side panel height 15 mm
3	1	Fixing materials kit

ORDER INFORMATION

Description	Qty/PU piece	Part no.
Fiber optic cable ducting	4	**23130-391**

COVER PANEL, HINGED

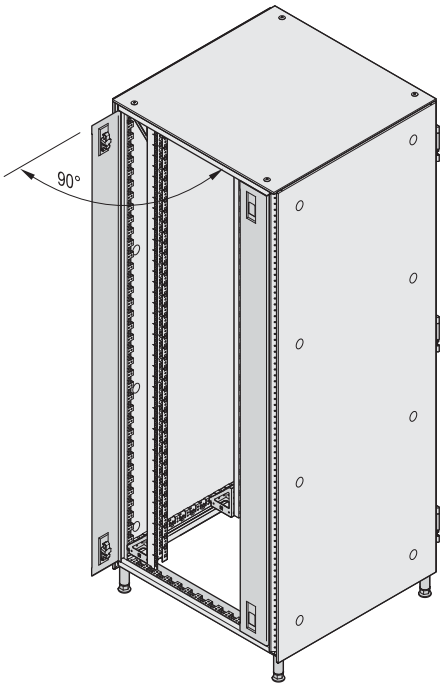

01006056

- For use in 2000 mm high and 800 mm wide cabinets
- For lateral covering of e.g. the patch cables
- Optionally with brush strip

DELIVERY INCLUDES

Item	Qty	Description
1	2	Cover panel, St, 1 mm, RAL 7021
2	1	Assembly kit

ORDER INFORMATION

Height mm	Width mm	Qty/PU piece	Part no.
2000	100	2	23130-343
Brush strip for cover panel height 2000 mm, PU 2 pieces			23130-379

Part number in bold face type: ready for shipping within 2 working days
Part number in normal type: ready for shipping within 10 working days

ZONE 3 CABLE MANAGEMENT

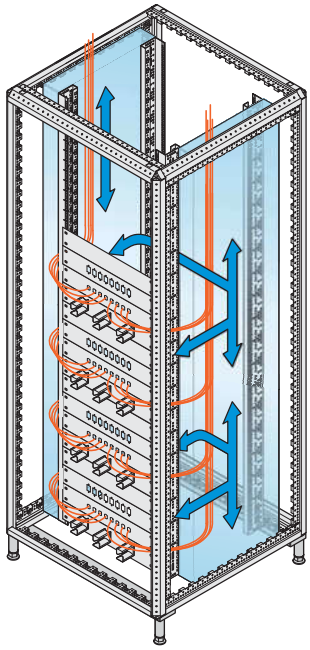

01006085

- Is located laterally behind zone 2 across the whole cabinet depth
- Fiber optic or copper cables are ducted from cable entry in lateral area of top cover or base plate to rear of distribution fields

PRODUCTS

- C-rail or cable support rail for the cabinet depth see from page 1.161
- Or cable ladder from page 0.3

CABLE SUPPORT RAIL FOR CABINET DEPTH

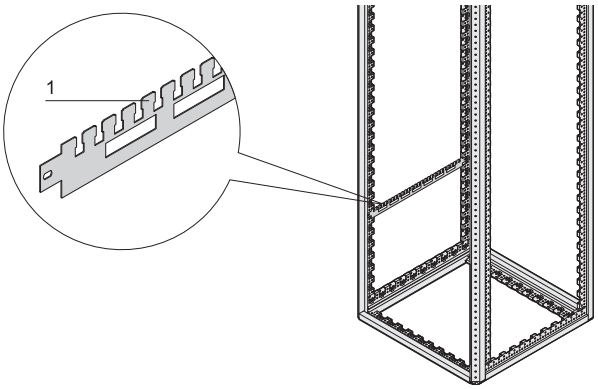

01006066

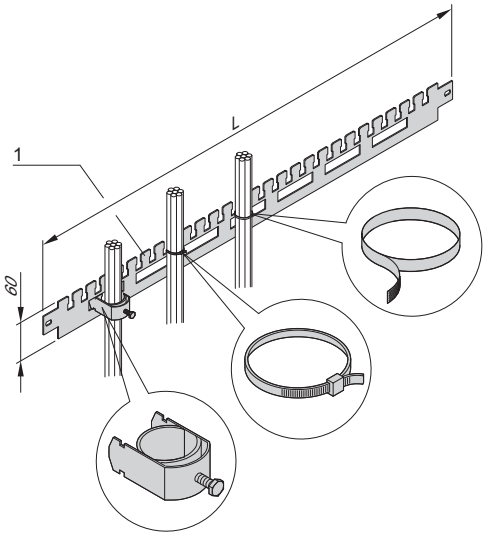

01006067

- For cable ducting in lateral area of cabinet
- For cable shells (bottom row) and for cable ties, resp. Velcro (top row)

DELIVERY INCLUDES

Item	Qty	Description
1	2	Cable support rail, St, 1.5 mm, RAL 7021
2	1	Assembly kit

ORDER INFORMATION

For cabinet depth mm	Length L mm	Part No.
600	466.4	**23130-326**
800	666.4	**23130-328**
900	766.6	**23130-329**
1000	866.4	**23130-330**
1200	1066.4	**23130-332**
Accessories		
Cable shells for cable bundle 18 ... 22 mm, PU 10 pieces		**20118-775**
Cable shells for cable bundle 22 ... 26 mm, PU 10 pieces		**20118-776**
Cable shells for cable bundle 26 ... 30 mm, PU 10 pieces		**20118-777**
Cable shells for cable bundle 30 ... 34 mm, PU 10 pieces		**20114-728**
Cable shells for cable bundle 34 ... 38 mm, PU 10 pieces		**20114-729**
Cable shells for cable bundle 38 ... 42 mm, PU 10 pieces		**20114-730**
Cable shell for cable bundle 42 ... 46 mm, PU 10 pieces		**20114-731**
Cable shells for cable bundle 46 ... 50 mm, PU 10 pieces		20118-778

NOTE

- Cable ties and Velcro see page 1.165

C-RAIL FOR THE CABINET DEPTH

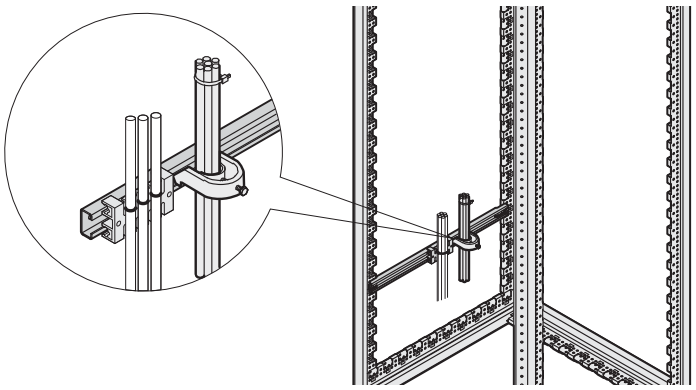

Cable retention rail and cable shell mounted on C-profile

Slide nut

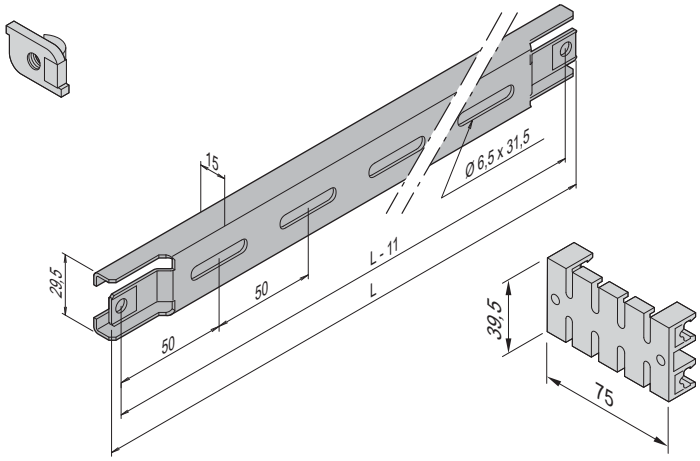

C-rail Cable retention rail

- For cable ducting in lateral area of cabinet
- For cable shells and cable retention rails

DELIVERY INCLUDES

Item	Qty	Description
1	2	C-rail, St, 1.5 mm, AlZn
2	1	Assembly kit incl. GND/earthing

ORDER INFORMATION

For cabinet depth mm	Length L mm	Part no.
600	460	**23130-086**
800	660	**23130-087**
900	760	**23130-088**
1000	860	**23130-089**
1200	1060	**23130-367**
Accessories		
Cable retention rail for C-rail Width 75 mm, Length 39.5 mm, PU 5 piece		**60118-472**
Cable shells for cable bundle 18 ... 22 mm, PU 10 pieces		**20118-775**
Cable shells for cable bundle 22 ... 26 mm, PU 10 pieces		**20118-776**
Cable shells for cable bundle 26 ... 30 mm, PU 10 pieces		**20118-777**
Cable shells for cable bundle 30 ... 34 mm, PU 10 pieces		**20114-728**
Cable shells for cable bundle 34 ... 38 mm, PU 10 pieces		**20114-729**
Cable shells for cable bundle 38 ... 42 mm, PU 10 pieces		**20114-730**
Cable shell for cable bundle 42 ... 46 mm, PU 10 pieces		**20114-731**
Cable shells for cable bundle 46 ... 50 mm, PU 10 pieces		20118-778
Slide nut for C-profiles, PU 10 piece		**21120-140**

- Cable ties and Velcro for cable retention rail see page 1.165

CABLE PANEL

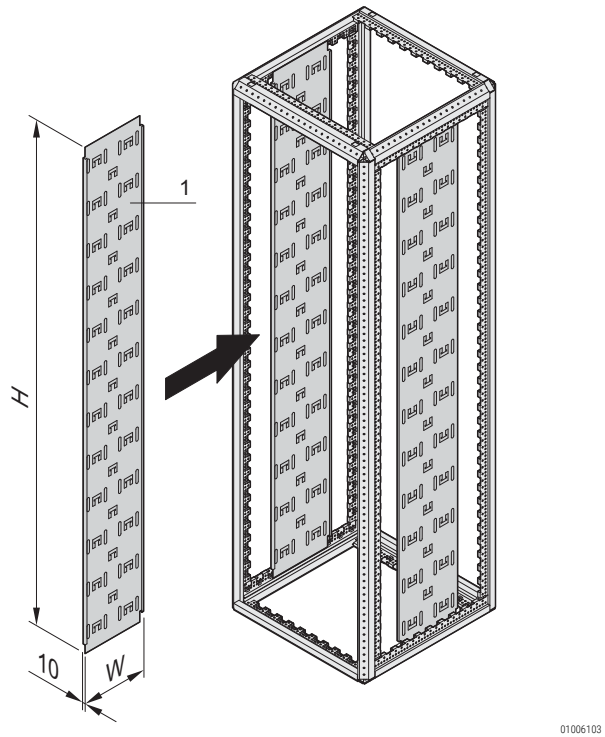

01006103

- For fitting directly onto the rack
- Cables are fixed in place with cable ties or Velcro
- Widths 110 mm, 150 mm and 250 mm

DELIVERY INCLUDES

Item	Qty	Description
1	2	Cable panel with cut-outs, St, 1 mm, RAL 7021
2	1	Assembly kit

ORDER INFORMATION

For cabinet height U	H mm	W mm	Part No.
8	446	110	23130-501
9	496	110	23130-504
12	604	110	23130-500
14	670	110	23130-503
18	917	110	23130-499
20	1019	110	23130-502
38	1700	150	23130-420
42	1900	150	**23130-421**
47	2100	150	**23130-422**
38	1700	250	23130-149
42	1900	250	**23130-150**
47	2100	250	23130-151

NOTE

- Cable ties and Velcro see page 1.165

CABLE LADDER

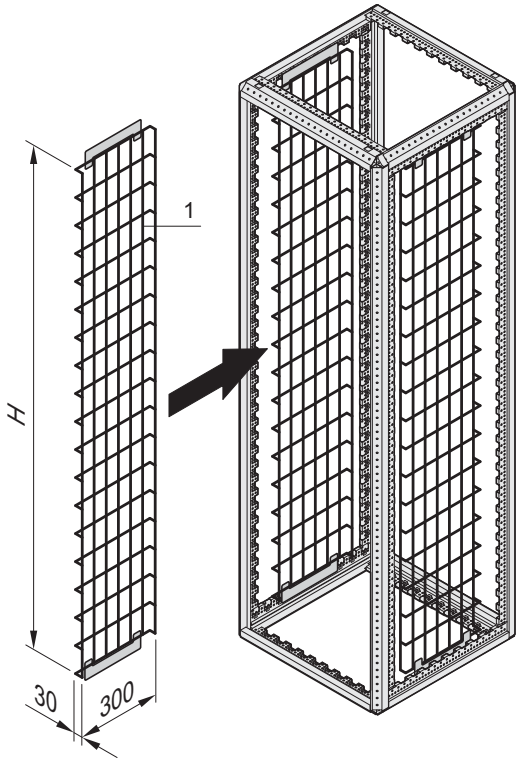

01014057

- For mounting in 2000 or 2200 mm high cabinets
- Cables are fixed in place with cable ties or Velcro

DELIVERY INCLUDES

Item	Qty	Description
1	2	Cable ladder, round steel, zinc-plated
2	1	Assembly kit

ORDER INFORMATION

For cabinet height mm	Height H mm	Width mm	Depth mm	Part no.
2000	1800	300	30	23130-554
2200	2000	300	30	23130-555

NOTE

- Cable ties and Velcro see page 1.165

ZONE 4 CABLE MANAGEMENT

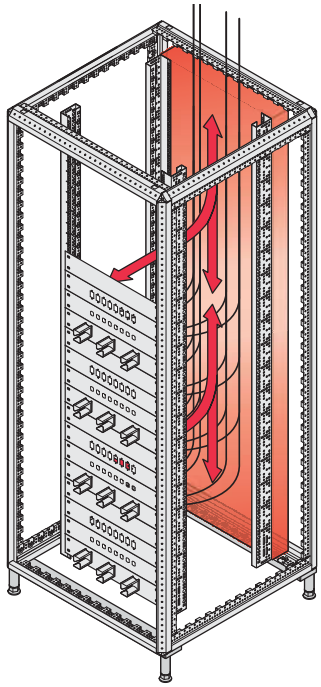

01006086

- Cable ducting on the inside of the cabinet rear panel across the entire cabinet width
- Top cover openings can be used for cable ducting

PRODUCTS

- C-rail and cable support rail for the cabinet width see from page 1.163

CABLE SUPPORT RAIL FOR CABINET WIDTH

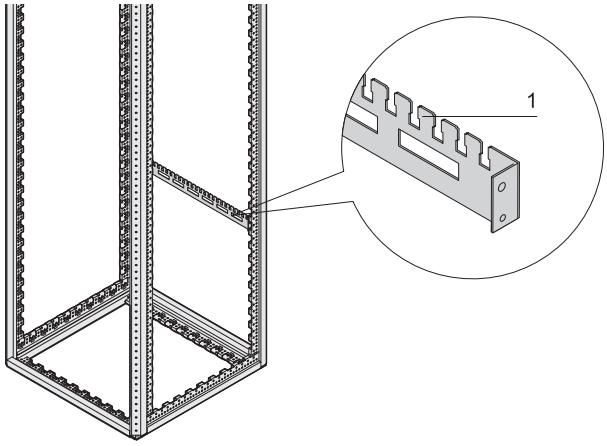

01006077

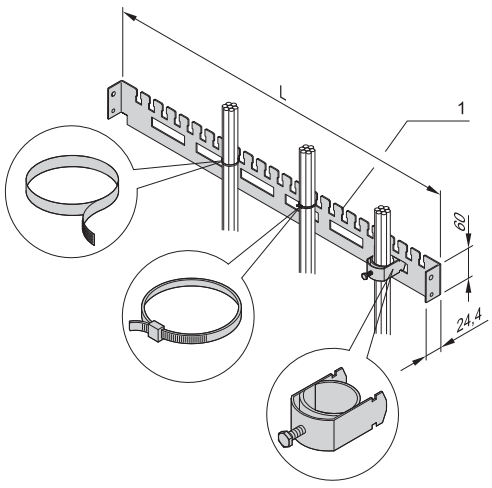

01006076

- For cable ducting in rear area of cabinet
- For cable shells (bottom row) and for cable ties, resp. Velcro (top row)

DELIVERY INCLUDES

Item	Qty	Description
1	2	Cable support rail, St, 1.5 mm, RAL 7021
2	1	Assembly kit

ORDER INFORMATION

For cabinet width mm	Length L mm	Part No.
600	550	**21236-093**
800	750	**23130-312**
Accessories		
Cable shells for cable bundle 18 ... 22 mm, PU 10 pieces		**20118-775**
Cable shells for cable bundle 22 ... 26 mm, PU 10 pieces		**20118-776**
Cable shells for cable bundle 26 ... 30 mm, PU 10 pieces		**20118-777**
Cable shells for cable bundle 30 ... 34 mm, PU 10 pieces		**20114-728**
Cable shells for cable bundle 34 ... 38 mm, PU 10 pieces		**20114-729**
Cable shells for cable bundle 38 ... 42 mm, PU 10 pieces		**20114-730**
Cable shell for cable bundle 42 ... 46 mm, PU 10 pieces		**20114-731**
Cable shells for cable bundle 46 ... 50 mm, PU 10 pieces		20118-778

NOTE

- Cable ties and Velcro see page 1.165

Part number in bold face type: ready for shipping within 2 working days
Part number in normal type: ready for shipping within 10 working days

C-RAIL FOR CABINET WIDTH

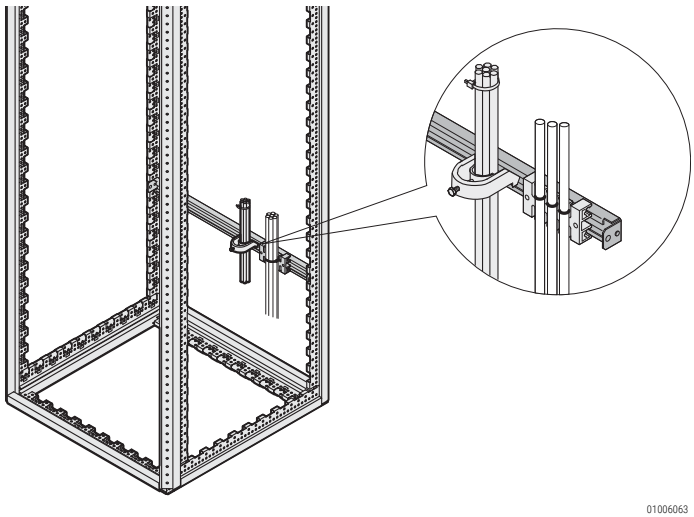

01006063

- For cable ducting in rear or front area of cabinet
- For cable shells and cable retention rails

DELIVERY INCLUDES

Item	Qty	Description
1	2	C-rail, St, 1.5 mm, finish AlZn
2	1	Assembly kit incl. GND/earthing

ORDER INFORMATION

For cabinet width mm	Length mm	Part no.
600	550	**23130-333**
800	750	**23130-334**
Accessories		
Cable retention rail for C-rail Width 75 mm, Length 39.5 mm, PU 5 piece		**60118-472**
Cable shells for cable bundle 18 ... 22 mm, PU 10 pieces		**20118-775**
Cable shells for cable bundle 22 ... 26 mm, PU 10 pieces		**20118-776**
Cable shells for cable bundle 26 ... 30 mm, PU 10 pieces		**20118-777**
Cable shells for cable bundle 30 ... 34 mm, PU 10 pieces		**20114-728**
Cable shells for cable bundle 34 ... 38 mm, PU 10 pieces		**20114-729**
Cable shells for cable bundle 38 ... 42 mm, PU 10 pieces		**20114-730**
Cable shell for cable bundle 42 ... 46 mm, PU 10 pieces		**20114-731**
Cable shells for cable bundle 46 ... 50 mm, PU 10 pieces		20118-778
Slide nut for C-profiles, PU 10 piece		**21120-140**

NOTE

- Cable tie and Velcro for cable retention rail see page 1.165

C-rail

Slide nut

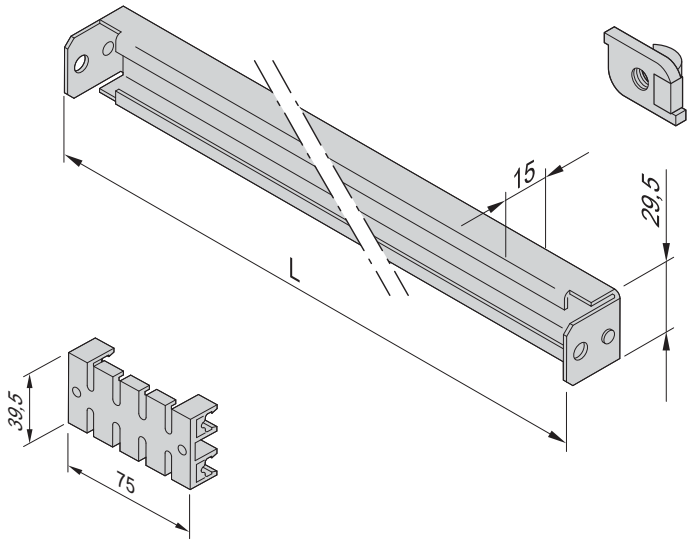

01006071 01006064 01504054

Cable retention rail

CABLE TIE, VELCRO

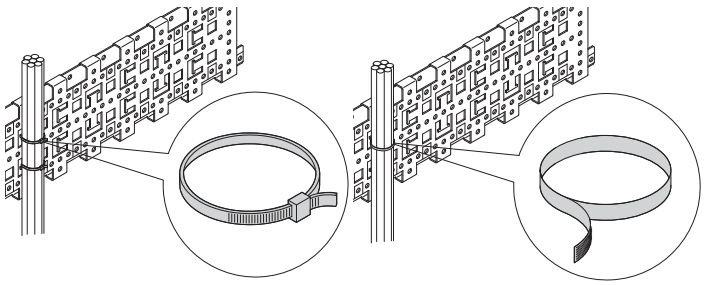

Cable tie Velcro

- Fixing materials kit for cable ducting

ORDER INFORMATION

Description	Part no.
Cable ties, Plastic, 92 mm x 2.5 mm, PU 25 piece	**20118-351**
Cable ties, Plastic, 186 mm x 5 mm, PU 25 piece	**20118-352**
Cable ties, Plastic, 360 mm x 5 mm, PU 25 piece	**20118-353**
Velcro strip, PE/PA, black, length 300 mm,, PU 10 piece	**20118-624**

Part number in bold face type: ready for shipping within 2 working days
Part number in normal type: ready for shipping within 10 working days

DEPOSIT FOR EXCESS CABLE LENGTHS

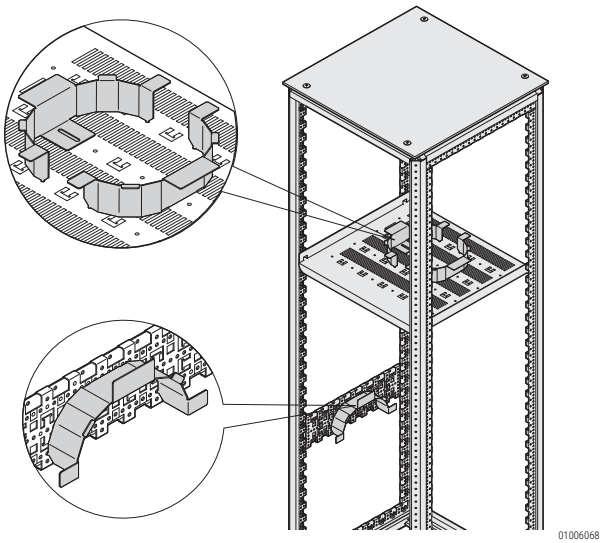

01006068

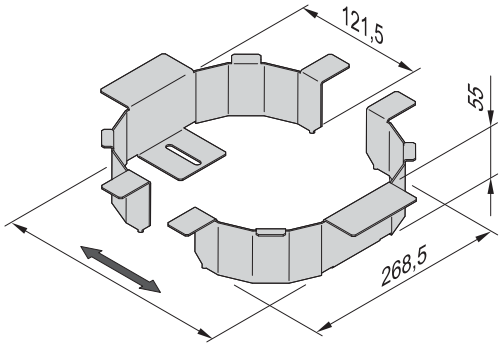

01006069

- For fixing on shelf or depth member
- Height with shelf is 2 U

DELIVERY INCLUDES

Item	Qty	Description
1	2	Deposit for excess cable lengths, St, 1.5 mm, height 55 mm, RAL 7021
2	1	Assembly kit

ORDER INFORMATION

Description	Part No.
Deposit for excess cable lengths	**23130-050**

NOTE

- Velcro see page 1.165
- Shelves see page 1.148
- Depth members see page 1.146

Cabinets – Varistar Platform

TWO LOAD-CARRYING CLASSES, ONE ACCESSORY RANGE: THE VARISTAR FRAMES



Varistar is the only cabinet platform that allows identical accessories to be combined with two basic frames.
The cabinet is available in Slim-Line (narrow) or Heavy-Duty (robust) profiles.

SLIM-LINE PROFILE

The Slim-Line version is based on very thin steel profiles in order to obtain the greatest opening width between the uprights. This frame can accommodate either 19" equipment or metric components to ETS 3000-119-3. With a maximum load of 400 kg* on the 19" plane the frame is still highly robust and suitable for demanding applications in electronics or data and network technology.

HEAVY-DUTY PROFILE

The Heavy-Duty frame, on the other hand, is designed for use with heavy loads or in regions susceptible to earthquakes. It offers on the one hand maximum stability for a load of up to 800 kg* on the 19" plane and, thanks to its high bending stiffness, can meet the shock and vibration requirements such as occur in railway and traffic signal installations, in the control of rotating machines, on commercial ships or in low-level military installations. In the IEC 61587-2 earthquake test the Heavy-Duty frame qualified for use in Bellcore Zone 3. Equipped with very simple, low-cost strengthening brackets, the Varistar Seismic version meets the demands of Bellcore Zone 4.



01006035

Slim-Line profile



01006034

Heavy-Duty profile

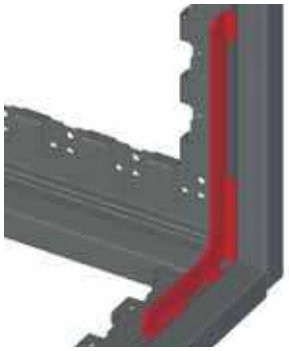

01008062

Heavy-duty profile with strengthening bracket

	Standard	Slim-Line	Heavy-Duty
Static load-carrying capacity	IEC 61587-1	400 kg *	800 kg *
Type of protection	IEC 60529	IP 20, IP 55	IP 20, IP 55
Shock test	IEC 61587-1	Maximum acceleration: 5 g Duration: 11 ms	Maximum acceleration: 5 g Duration: 11 ms
Vibration test	IEC 61587-1	Frequency: 5 Hz -100 Hz Acceleration: 1 g	Frequency: 5 Hz -100 Hz Acceleration: 1 g
Earthquake test	IEC 61587-2		Standard: up to Bellcore Zone 3, acceleration: 3 g, Frequency: 1 Hz ... 5 Hz With strengthening: up to Bellcore Zone 4, acceleration: 5 g, Frequency: 2 Hz ... 5 Hz
EMC shielding	IEC 61587-3	60 dB at 1 GHz, 40 dB at 3 GHz	60 dB at 1 GHz, 40 dB at 3 GHz
Installing options		19" or ETS	19"

* The figures for static load-carrying capacity are based on the test procedure of IEC 61587-1. In this procedure the cabinet must withstand being moved about on the floor and dropped from a height of 1000 mm onto a hard surface while carrying the maximum load, without sustaining substantial deformations to the frame or to the 19" panel/ slide mounts. The possible loading for the Varistar frame is therefore, under normal operating conditions, considerably higher than the test value given under IEC 61587-1.

DECIDEDLY DIFFERENT: THE VARISTAR SEALING AND SHIELDING CONCEPT

Item	Description
1	Frame
2	Conductive textile EMC gasket with CuNi coating
3	Contact/shielding
4	Rear panel
5	Side panel

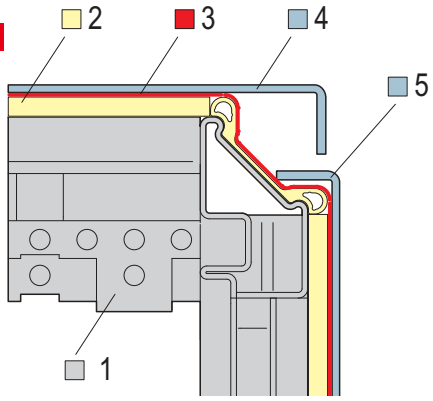

In most shielding designs currently available, conductive seals or springs connect the cover parts to the cabinet frame. The points of contact have thus to be kept conductive and corrosion-free.
With VARISTAR, however, the conductive textile gaskets connect the cladding parts together directly, with two results:
A considerably better shielding performance of 60 dB at 1 GHz (and 40 dB at 3 GHz) is obtained than with conventional designs. There is no longer any need for expensive treatment of the frame surface.
The textile EMC gasket is at the same time also a shield against dust and water to IP 55. Where no shielding is required, a rubber gasket offering the same IP 55 protection is used. Both gaskets are fitted to the 45°-angled surface of the exterior of the frame.

Shielding up to 3 GHz

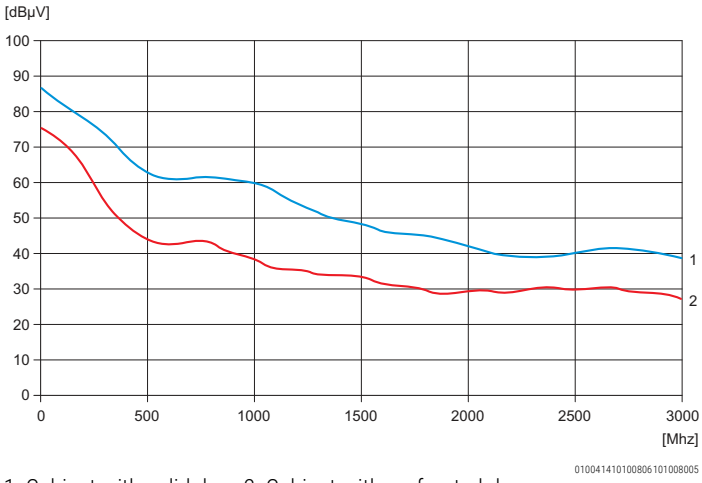

1: Cabinet with solid door 2: Cabinet with perforated door



SMOOTH-RUNNING AND ABSOLUTELY TIGHT: THE VARISTAR LOCKING SYSTEM

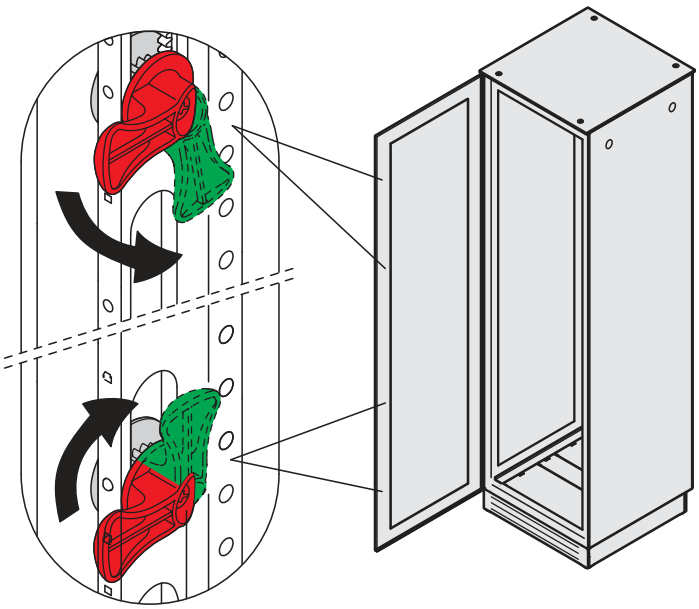

The latching system also contributes to protection class and shielding.
The innovative locking bar accepts a variable number of deadbolts, depending on the cabinet height, to ensure the most even compression of the gaskets.
And best of all: Activating the locking bar causes the latches to move in the opposite direction. Thus the frictional forces of the bolts are balanced out and a resulting lopsided vertical force on the door is avoided. The doors close easily and with an absolute seal.
EMC doors are fitted with 4-point locking, IP and server doors with 3-point locking.

Part number in bold face type: ready for shipping within 2 working days
Part number in normal type: ready for shipping within 10 working days

Cabinets – Varistar Platform

PEERLESS AND EFFICIENT: THE VARISTAR PROFILE (SLIM-LINE AND HEAVY-DUTY)

19" brackets are fixed without depth members



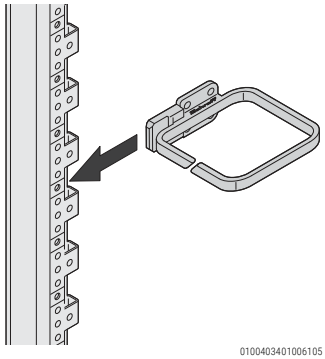

0100403401006105

Self-fixing cable eyes

The VARISTAR profile has fixing holes in all three axes (height, width, depth), following a 25 mm grid. This allows for the greatest variability in the fitting of components and accessories. Thus for example 19" panel/slide mounts may be installed in a 600 mm wide cabinet without additional depth members. This saves costs and provides stability on the 19" plane.
The intricately shaped form of the profile offers further new assembly possibilities. Cable eyes, for instance, can be plugged directly into the frame whilst fixing themselves.

NEW AND WELL THOUGHT OUT: VARISTAR CABLE MANAGEMENT

Schroff has divided the available space in the VARISTAR into zones and given a simple description of the position and use of these zones. The coloured arrows show the direction of the cable ducting.

For each zone a range of accessories has been developed to suit the conditions in the cabinet, which simplifies cabling and thus helps to include as many connections as possible in a distribution cabinet. The VARISTAR profile with its many fixing options has thus proved a real boon.

Zone 1

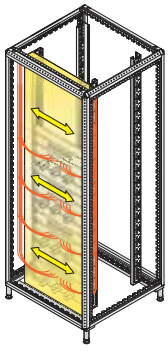

01006087

- In front of the 19" plane
- In this zone the patch cables are ducted horizontally between the distribution fields

Zone 2

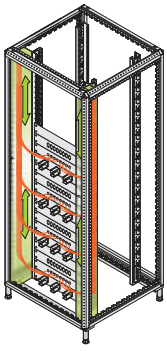

01006088

- On the right and left hand side, next to the 19" plane
- In this zone patch cables are ducted vertically in a kind of channel to the individual components

Zone 3

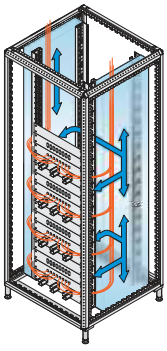

01006085

- Zone 3 is located laterally behind the 19" plane across the cabinet depth; mainly for 800 mm wide cabinets
- In this zone entering cable bundles are fixed in the cabinet, parted and ducted to the rear of the distribution fields

Zone 4

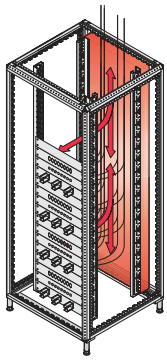

01006086

- Zone 4 is located in the rear across the cabinet width
- Alternative to zone 3 for only 600 mm wide cabinets or when cable entry is at the rear of the cabinet

HEAT DISSIPATION TO EXACT REQUIREMENTS: COOLING CONCEPTS FOR VARISTAR

Depending on installed heat dissipation and the surroundings, VARISTAR offers various cooling options and also good conditions for problem-free operation of the installed equipment.
Either top cover fans are used to assist the heat dissipation or perforated doors with 78 % air throughput are fitted.
Additionally, VARISTAR LHX 20/40 with assembled air/water heat exchanger allows to cool especially strained appliances with water.
And that for up to 40 kW per cabinet.

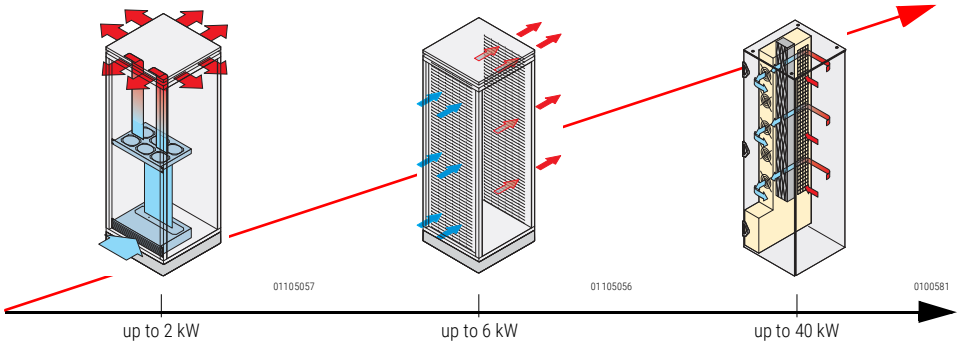


01106027

Fan unit, positioned inside


41003017

78 % air throughput


01005020

Air/water heat exchanger

CLASSIC AND CONSISTENT: VARISTAR COLOUR AND DESIGN

As well as its functional aspects, in the development of VARISTAR the design of the individual components and their combined effect on the appearance of the cabinet was always a priority. The cabinet gains its characteristic, unmistakable look from the high narrow door with the memorable hinges and the very thin, almost inconspicuous top cover edge. While rack, base and cover are offered in black grey (RAL 7021) for all standard cabinets, a choice of two colour options are available - even in our standard programme - for side panels, doors and rear panels:

Either entirely black grey (RAL 7021), as is the contemporary look in data centres and recording studios. Or in light grey (RAL 7035), whereby an attractive combination of mainly light surfaces with a few dark accents is obtained.
Alternatively, VARISTAR can be supplied in many RAL colours within 15 working days, or even as a combination of two special colours. The current range of colours can be seen online at **www.schroff.de/modification**.


01006037

Colour RAL 7021 (black grey)


01006036

Colour combination RAL 7035/RAL 7021 (light grey/black grey)

Part number in bold face type: ready for shipping within 2 working days
Part number in normal type: ready for shipping within 10 working days

FRAME DIMENSIONS

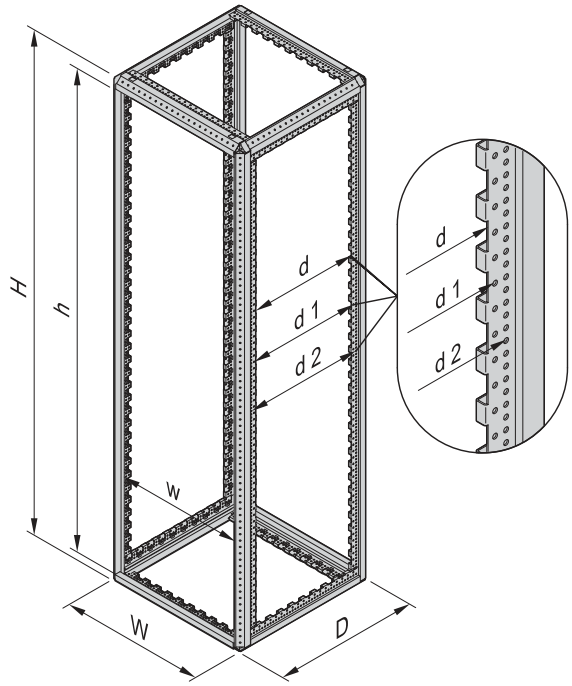

01005087

Height

Cabinet height		Frame	
		H	h
mm	U	mm	mm
1200	24	1192	1102
1400	29	1392	1302
1600	33	1592	1502
1800	38	1792	1702
2000	42	1992	1902
2200	47	2192	2102

Width

Cabinet width	Frame	Slim-Line	Heavy-Duty
	W	w	w
mm	mm	mm	mm
600	592	535	502
800	792	735	702

Depth

Cabinet depth		Frame		
	D	d	d_1	d_2
mm	mm	mm	mm	mm
300	292	128.8	150	175
600	592	428.8	450	475
800	792	628.8	650	675
900	892	728.8	750	775
1000	992	828.8	850	875
1100	1092	928.8	950	975
1200	1192	1028.8	1050	1075

Adjustable feet

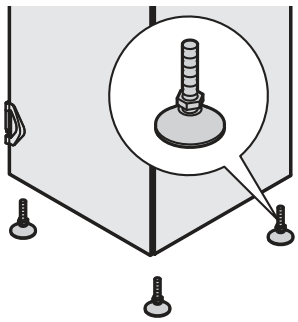

01004081

Castors with adjustable feet

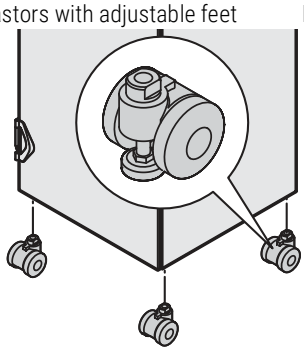

Locking castors

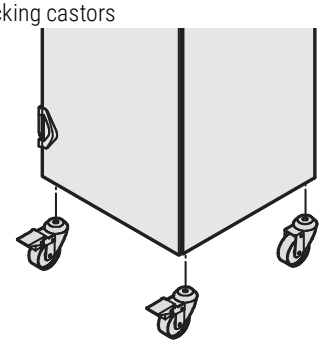

0100408201004156

Base/plinth

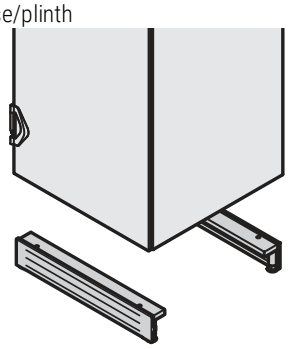

Mobile base/plinth

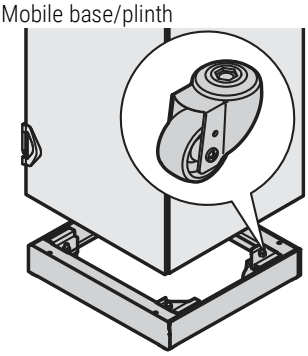

0100411001004111

Height of adjustable feet, castors, base/plinth

Adjustable feet	20 ... 40 mm
Locking castors	85 mm
Castors with adjustable feet	85 ... 95 mm
Base/plinth (feet)	112 ... 132 mm
Base/plinth, mobile	126.5 ... 134.5 mm

TOP COVER WITH CUT-OUT ZONES

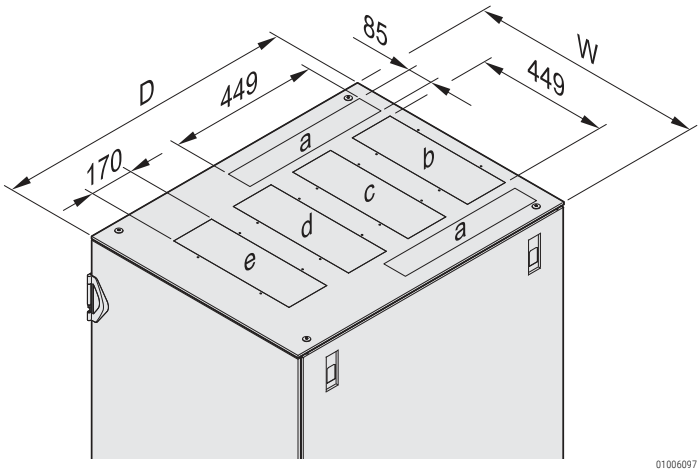

	W = 600 mm					W = 800 mm				
D	a	b	c	d	e	a	b	c	d	e
600	-	✓	✓	-	-	-	✓	✓	-	-
800	-	✓	✓	✓	-	✓	✓	✓	✓	-
900	-	✓	✓	✓	-	✓	✓	✓	✓	-
1000	-	✓	✓	✓	✓	✓	✓	✓	✓	✓
1100	-	✓	✓	✓	✓	✓	✓	✓	✓	✓
1200	-	✓	✓	✓	✓	✓	✓	✓	✓	✓

BASE PLATE, MULTI-PIECE

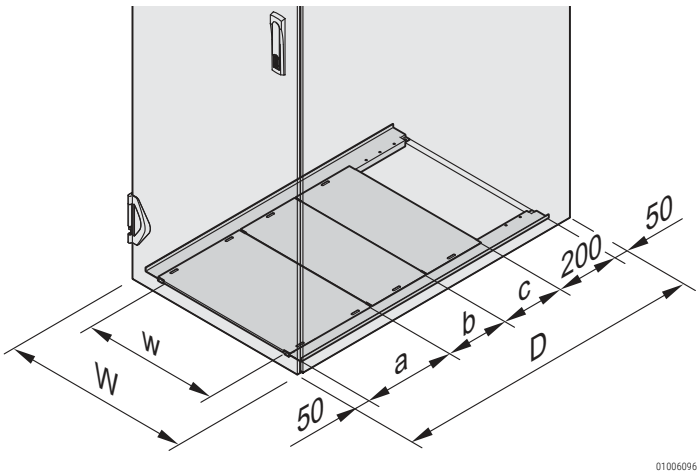

	Depth in mm		
D	a	b	c
600	300	-	-
800	300	200	-
900	300	300	-
1000	300	200	200
1100	300	300	200
1200	300	300	300

Cabinet width W mm	Opening width w mm
600	426
800	626

Part number in bold face type: ready for shipping within 2 working days
Part number in normal type: ready for shipping within 10 working days

North America

Warwick, RI, USA
Tel +1.800.525.4682
San Diego, CA, USA
Tel +1.800.854.7086

Europe, Middle East & India

Straubenhardt, Germany
Tel +49 7082 794 0
Betschdorf, France
Tel +33 3 88 90 64 90
Warsaw, Poland
Tel +48 22 209 98 35
Hemel Hempstead,
Great Britain
Tel +44 1442 24 04 71
Lainate, Italy
Tel +39 02 932 714 1
Dubai, United Arab Emirates
Tel +971 4 37 81 700
Bangalore, India
Tel +91 80 67152000
Istanbul, Turkey
Tel +90 216 250 7374

Asia Pacific

Shanghai, China
Tel +86 21 2412 6943
Singapore
Tel +65 6768 5800
Shin-Yokohama, Japan
Tel +81 45 476 0271

Our powerful portfolio of brands:

CADDY ERICO HOFFMAN RAYCHEM SCHROFF TRACER

nVent

nVent.com/SCHROFF

©2018 nVent. All nVent marks and logos are owned or licensed by nVent Services GmbH or its affiliates. All other trademarks are the property of their respective owners.
nVent reserves the right to change specifications without notice.