6306-2Z

SKF Explorer

Dimensions

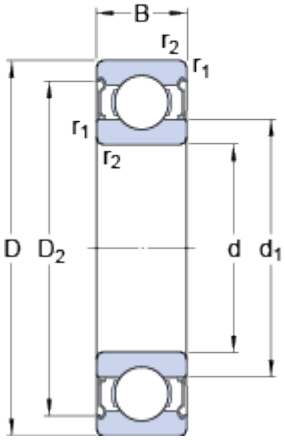

d		30	mm
D		72	mm
B		19	mm
d_1		44.6	mm
D_2		61.88	mm
$r_{1,2}$	min.	1.1	mm

Abutment dimensions

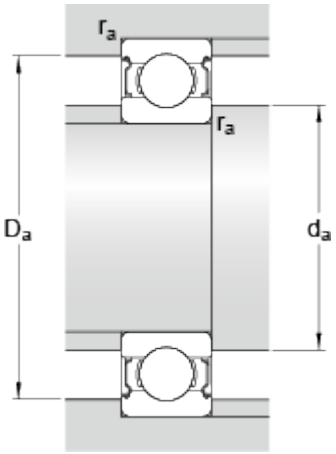

d_a	min.	37	mm
d_a	max.	44.5	mm
D_a	max.	65	mm
r_a	max.	1	mm

Calculation data

Basic dynamic load rating	C	29.6	kN
Basic static load rating	C_0	16	kN
Fatigue load limit	P_u	0.67	kN
Reference speed		20000	r/min
Limiting speed		11000	r/min
Calculation factor	k_r	0.03	
Calculation factor	f_0	13.1	

Mass

Mass bearing	0.363	kg