Mounting bracket, Series MU1/PR1-MBR-...-W02

R412004872

Series MU1

- Qn = 14500 l/min



Technical data

Industry	Industrial
Min. ambient temperature	-40 °C
Max. ambient temperature	60 °C
Housing material	Steel, chrome-plated
Surface housing	galvanized
	R412004872

Dimensions

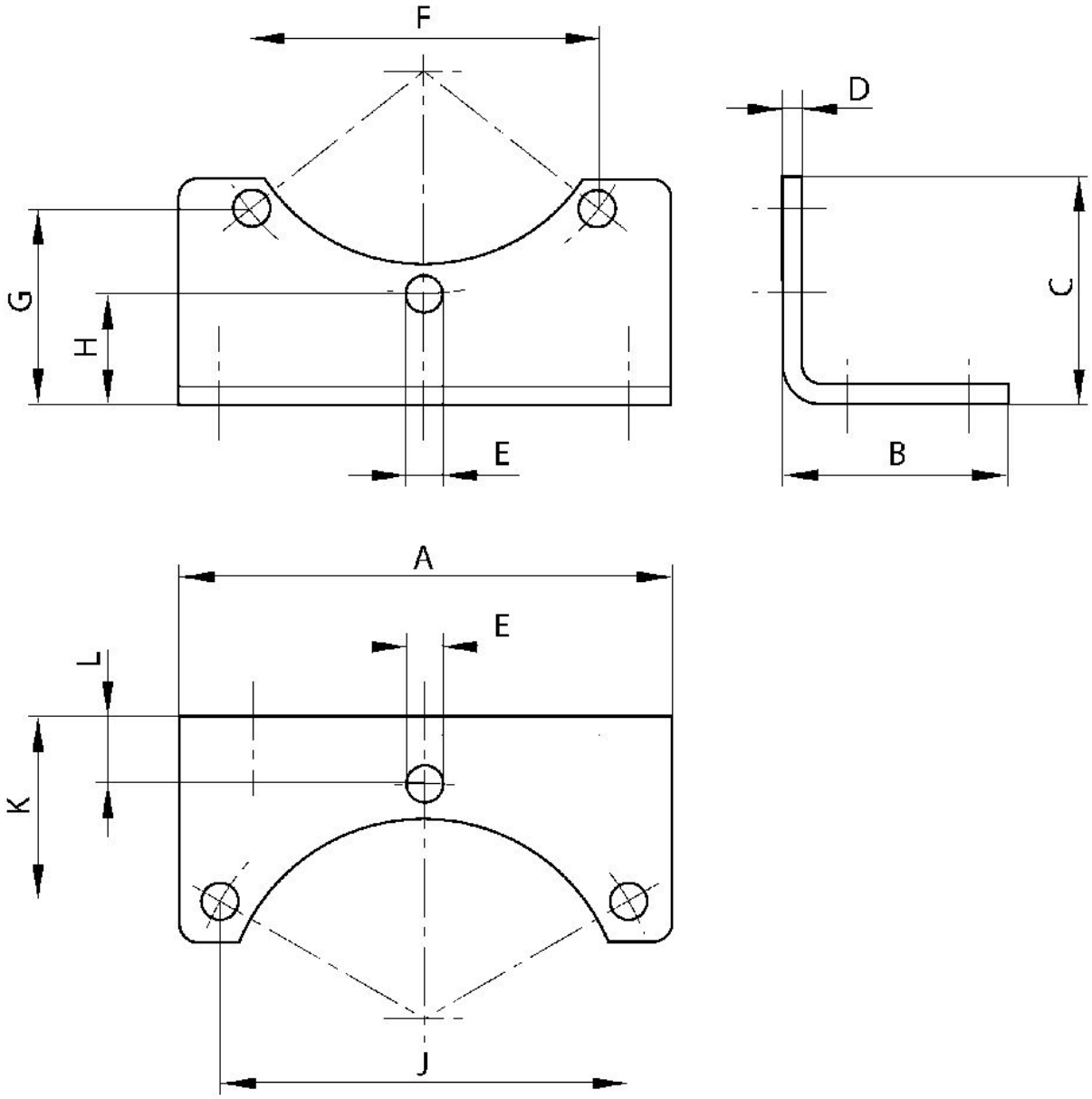

Part No.		A	B	C	D	E	F	G	H
R412004872	G1	76	35	35	3	5.5	53.6	30.1	17

Part No.	J	K	L
R412004872	63.2	28.8	10.5