rotronic

Datenblatt - Fiche technique - Data sheet

12.03.3115



ROLINE HDMI-DVI Adapter, HDMI ST / DVI-D BU,

ROLINE Adaptateur HDMI-DVI, HDMI M-DVI F,

ROLINE HDMI-DVI Adapter, HDMI M – DVI F,

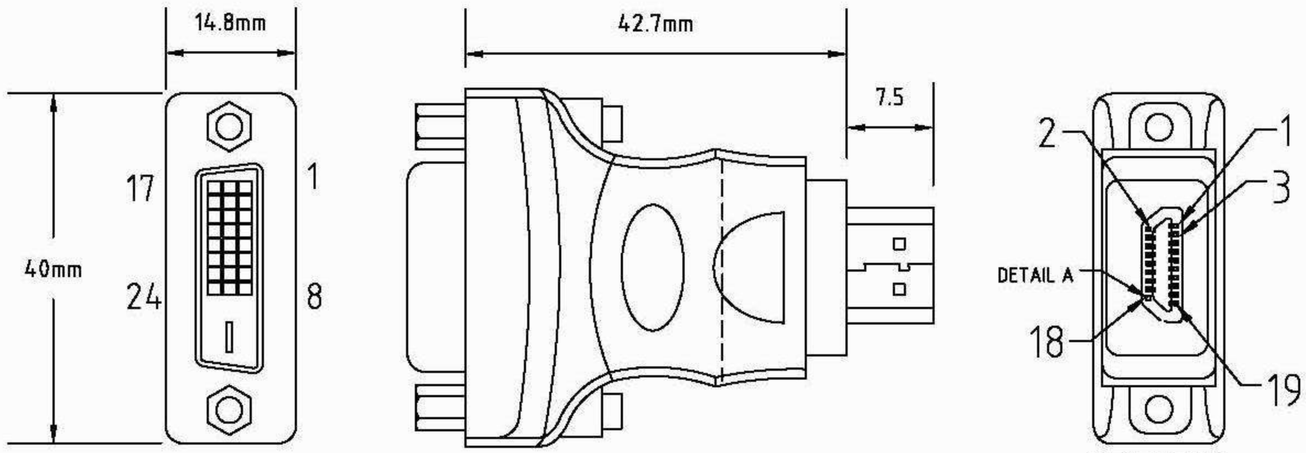

DVI(24+1)F

包装方式:RLA真空罩+红色小插卡+条码贴纸包装

NOTE:

1. CABLE:28AWG,UL1007,電子線,19C,BLUE*19C,PVC JACKET
2. LENGTH: 35MM*19C
3. CONNECTOR:DVI24+1F*1PCS,HDMI19M*1PCS (黑膠芯)
4. CONTACTS:

HDMI19M	1	3	2	4	6	5	7	9	8	10	12	11	17	18	15	16	19	64
DVI24+1(F)	2	1	3	10	9	11	18	17	19	23	24	22	15	14	6	7	16	64

5. MOLD: 轉換頭模,成型裝配黑色料
6. OPEN/SHORT TEST:100% TEST.
   INSULATION:1M.

COMPANY	RLA		ITEM NO.	12.03.3115	編號	B	
REVISION	DATE	DISCRIPTION	DRAWN BY		Rotronic Co.,Ltd.	SCALE	
REV.A/0	2007.02.01	C9-2702004	DESIGNED BY			UNIT(mm)	
			APPROVAL BY			DRAWING NO.	