TOS ON/OFF & PROPORTIONAL CONTROLLER



The TOS range of temperature controllers offer an extremely cost effective analogue solution for simple on/off or proportional control. Options for J/K thermocouples and PT100 RTDs are available with either relay or SSR drive outputs.

- Selectable on/off or proportional action
- Up to 1200°C scale ranges
- J, K T/couple or PT100 input options
- Relay or SSR drive output options

SPECIFICATION

Supply voltage:	90 to 264Vac/dc @ 50/60 Hz
Power drain:	3VA max.
Scale accuracy:	+/- 2% of FSD
Scale range:	See standard items below
Input sensor:	J or K thermocouple or PT100 - 3 wire
Max ext. resist:	T/couple: 100 , PT100: 5 per wire
Control band:	On/Off: Hysteresis = 0.5 +/- 0.2% of scale range
	Propl: Proportional band = 3% of scale range
Output rating:	Relay: 3A/240Vac resistive
	SSR: 20mA/12Vdc
Electrical life:	100,000 ops at rated load
Ambient range:	-10 to 50°C non-condensing
Weight:	180gms

CONNECTION DIAGRAM

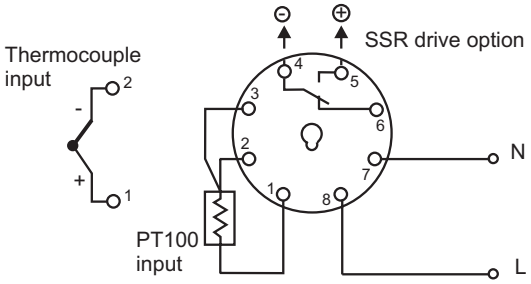

DIMENSIONS

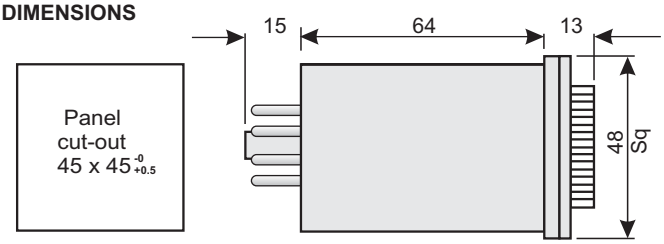

STANDARD ITEMS

Input	Output	Range	Part Number
J T/c	Relay	0 to 100°C	TOS-B4RJ1C
		0 to 200°C	TOS-B4RJ2C
K T/c	Relay	0 to 200°C	TOS-B4RK2C
		0 to 400°C	TOS-B4RK4C
		0 to 800°C	TOS-B4RK8C
PT100	Relay	0 to 100°C	TOS-B4RP1C

For suitable panel mounting or DIN-rail wiring sockets see page 33. For thermocouples and PT100 probes see page 26.

TC4800 ON/OFF & PD TEMPERATURE CONTROLLER



The TC4800 range of temperature controllers is available in on/off or proportional + derivative (PD) control options, operating from a range of sensors. A 4 - 20mA input type also enables them to be used for the control of processes other than temperature. Of particular note is the dial lock which can be used to prevent tampering.

- Dial lock
- On/off or PD control action
- Dual 110/230Vac supply input
- J, K T/c, PT100 or 4 - 20mA inputs
- Deviation LEDs plus meter output
- Relay or SSR drive output options

SPECIFICATION

Supply voltage:	110/230(220-240)Vac @ 50/60 Hz or 24Vac/dc
Power drain:	4VA max.
Scale accuracy:	+/- 2% of full scale
Scale range:	See part number below
Input sensor:	J, K, R or T thermocouple, 3-wire PT100 or 4-20mA
Max ext. resist:	T/couple: 100 , PT100: 5 per wire
Control band:	On/Off: Hyst. = 0.5% (1% TC486*) of full scale
	Propl: PB = 4% to 10% of full scale
Cycle time:	20 secs (PD model only)
Output rating:	Relay: SPCO, 5A/240Vac resistive
	SSR: 30mA/24Vdc
Electrical life:	100,000 ops at rated load
Deviation output:	+/- 50 Amps
Ambient range:	-10 to 50°C non-condensing
Approvals:	Conforms to CE emc EN50081-1 & EN50082-1 and low voltage EN61010-1 directives
Weight:	200gms

Part Numbering Options : TC48 A B - C D -110/230VAC

A	Control	On/off	1	D	Scale	J, K 0 to 200ºC	1
		PD	3			J, K 0 to 400ºC	2
		Latch	5			K 0 to 600ºC	3
		On/off 4-20mA	6			K 0 to 800ºC	4
B	Action/ Output	Rev/relay	0			K 0 to 1200º	5
		Dir/relay	1			T -100 to 200ºC	0
		Rev/SSR	2			T -170 to 30ºC	6
		Dir/SSR	3			R 0 to 1600ºC	0
C	Sensor	K t/couple	0			PT100 -100 to 200ºC	0
		J t/couple	1			PT100 -50 to 150ºC	1
		T t/couple	2			PT100 0 to 100ºC	2
		R t/couple	3			PT100 0 to 200ºC	3
		PT100 3 wire	5			PT100 -50 to 100ºC	4
		4-20 mA	6			4-20mA 0 to 100%	6

For other temperature ranges, please contact our sales office.

CONNECTION DIAGRAM

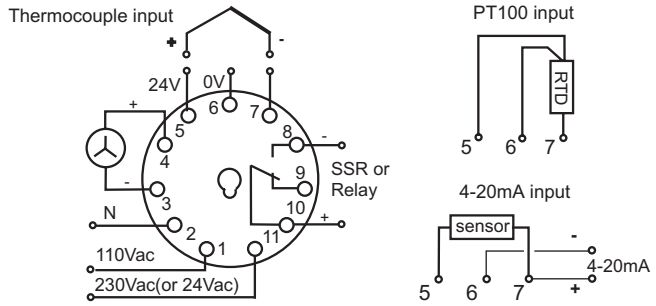

DIMENSIONS

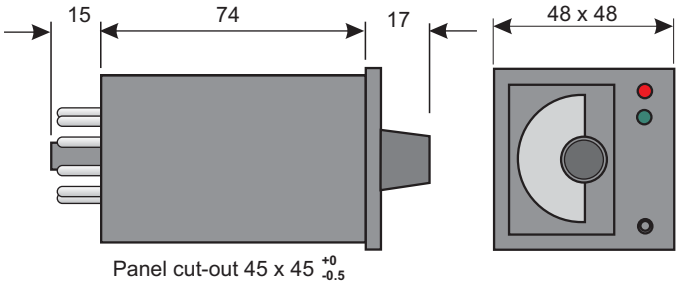

STANDARD ITEMS

Input	Mode	Output	Range	Part Number
K T/c	On/Off	Relay	0 to 200°C	TC4810-01-110/230VAC
K T/c	On/Off	Relay	0 to 400°C	TC4810-02-110/230VAC
K T/c	On/Off	Relay	0 to 800°C	TC4810-04-110/230VAC
K T/c	On/Off	Relay	0 to 1200°C	TC4810-05-110/230VAC
J T/c	On/Off	Relay	0 to 200°C	TC4810-11-110/230VAC
PT100	On/Off	Relay	-50 to 150°C	TC4810-51-110/230VAC
PT100	On/Off	Relay	0 to 100°C	TC4810-52-110/230VAC
PT100	On/Off	Relay	0 to 200°C	TC4810-53-110/230VAC
K T/c	PD	Relay	0 to 200°C	TC4830-01-110/230VAC
K T/c	PD	Relay	0 to 400°C	TC4830-02-110/230VAC
K T/c	PD	Relay	0 to 600°C	TC4830-03-110/230VAC

For suitable panel mounting or DIN-rail wiring sockets see page 33. For thermocouples and PT100 sensors see page 26.

TR4800 TACHOMETER RELAY



The TR4800 series tachometer relay will switch it's output at the speed selected on the front dial. The units are designed to match the styling of the TC4800 temperature controllers and TT4800 Timers. They offer a fast reaction time of <0.4sec at 150rpm, have an internal supply to power active sensors and a meter output to display the measured speed. The range consists of three models covering speeds from 5 to 10,000 rpm.

- 3 models for 5 to 10,000 rpm
- 1mA meter output to display rpm
- High speed response to input
- Internal 15Vdc sensor supply

SPECIFICATION

Supply voltage:	110/230(220-240)Vac @ 50/60 Hz or 24Vac/dc
Power drain:	3VA or 2 Watts max.
Scale accuracy:	+/- 2% of full scale
Sensing ranges:	01: 5 to 100 rpm 02: 50 to 1000 rpm 03: 500 to 10000 rpm
Input sensor:	Any volt-free contact or 3-wire active sensor with a power consumption of < 25mA at 15Vdc. See SI and SC range of sensors on pages 29 and 30.
Output rating:	SPCO relay rated at 5A/240Vac/30Vdc resistive
Electrical life:	100,000 ops at rated load
Metering output:	1 mAmp fsd at 75
Ambient range:	-10 to 60°C non-condensing
Approvals:	Conforms to CE emc EN50081-1 & EN50082-1 and low voltage EN61010-1 directives

Part Numbering Options : TR4801 - A - B

A	Range	5 - 100 rpm 50 - 1000 rpm 500 - 10000 rpm	01 02 03
B	Power supply	110/230Vac 24Vac/dc	110/230VAC 24VAC/DC

CONNECTION DIAGRAM

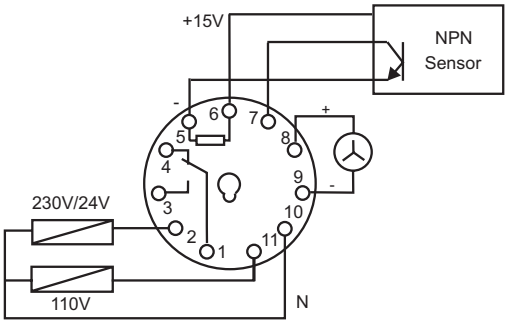

DIMENSIONS

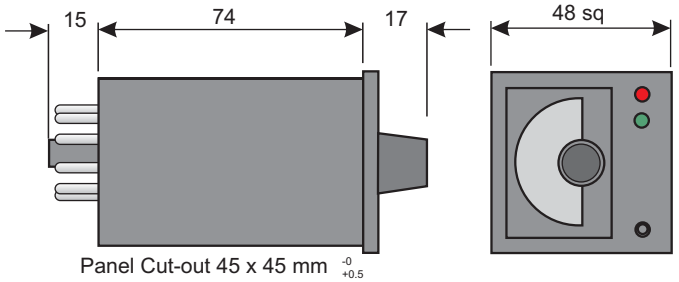

STANDARD ITEMS

Type	Range	Part Number
Tachometer relay	5 -100 rpm	TR4801-01-110/230VAC
Tachometer relay	50 -1000 rpm	TR4801-02-110/230VAC
Tachometer relay	500 -10000 rpm	TR4801-03-110/230VAC

Note: For suitable panel mounting or DIN rail wiring sockets see page 33.

FSRS SHAFT ROTATION SENSOR



The FSRS shaft rotation sensor is specifically designed to prevent access to a normally rotating machine until it has slowed to a safe speed. An adjustable potentiometer on the facia enables the sensor to be set for an appropriate minimum speed which may be considered as safe for the operator to gain access. If the sensor does not receive a pulse within the time set by the potentiometer, it's output will energise and this signal can be used to disable a guard. By using the normally closed contacts the sensor becomes fail-safe in the event of loss of power

SPECIFICATION

Supply voltage :	110/230(220-240)Vac @ 50/60 Hz
Power drain :	4VA
Time delay :	1 to 30 seconds
Sensing speed :	Calculated by S_{min} = 60/nT rpm where n = No. of pulses per revolution T = time set on potentiometer
Min. Pulse width:	3 msecs (for 50% duty cycle). To calculate the minimum 'flag' width (W_f) use the formula W_f = r/10 mm (50% duty) where r = radius of shaft
Input sensor:	Any volt-free contact (no bounce) or 3-wire active Sensor with a power consumption of < 25mA at 24Vdc. See SI or SC series sensors on pages 29 - 30.
Output rating:	SPCO relay rated at 5A/240Vac/30Vdc resistive
Electrical life:	100,000 ops at rated load
Ambient range:	10 to 50°C non-condensing
Approvals:	Conform to CE emc EN50081-1 & EN50082-1 and low voltage EN61010-1 directives

CONNECTION DIAGRAM

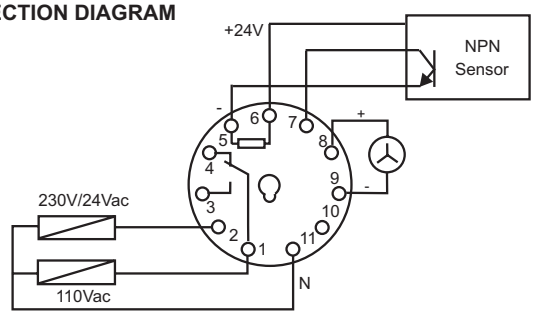

DIMENSIONS

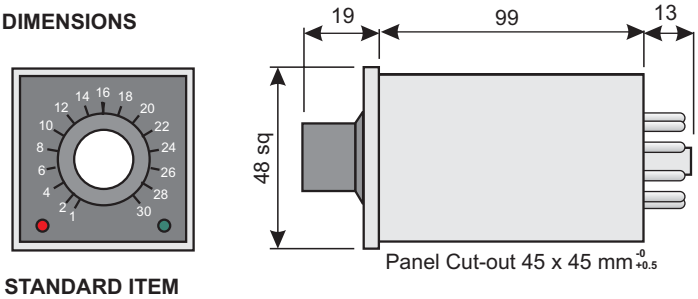

STANDARD ITEM

Type	Delay	Part Number
Shaft Rotation Sensor	30 sec	FSRST30SLP-110/230VAC

Note: For suitable panel mounting or DIN rail wiring sockets see page 33.

FLST LIQUID LEVEL DETECTOR



The FLST liquid level detector has a fixed sensitivity, designed primarily to sense water using a conductive differential sensing device. By shorting the high and low probes, however, it can also be used for single point detection. Under differential operation, the output relay will energise when the liquid falls below the 'Low' level and de-energise when it rises above the 'High' level.

- Differential or single point sensing
- Dual supply voltage
- Level indicating LEDs

SPECIFICATION

Supply voltage:	110/230(220-240)Vac @ 50/60 Hz
Power drain:	4VA
Operating res:	950K on, 220K ff
Sensing delay:	500 msec typical
Output rating:	SPCO relay rated at 5A/240Vac/30Vdc resistive
Electrical life:	100,000 ops at rated load
Ambient range:	-10 to 60°C non-condensing
Approvals:	Conforms to CE emc EN50081-1 & EN50082-1 and low voltage EN61010-1 directives
Weight:	180gms

CONNECTION DIAGRAM

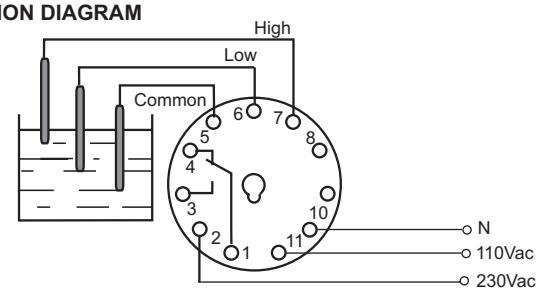

DIMENSIONS

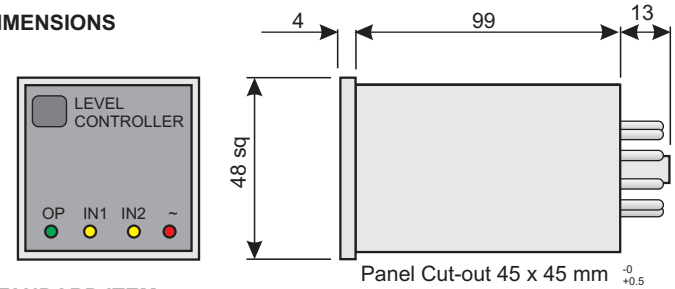

STANDARD ITEM

Type	Part Number
Differential Level sensor	FLST-110/230VAC

Note: For suitable panel mounting or DIN rail sockets see page 33.

FLDT LIQUID LEVEL DETECTOR



The FLDT liquid level detector is designed to operate with a differential sensing device but by shorting the high and low probes it can also be used for single point detection. A sensitivity control on the front of the unit enables it to be used for a wide range of conductive liquids. Under differential operation, the output relay will energise when the liquid falls below the 'Low' level and de-energise when it rises above the 'High' level.

- Differential or single point sensing
- Adjustable sensitivity control
- Dual supply voltage

SPECIFICATION

Supply voltage:	110/230(220-240)Vac @ 50/60 Hz
Power drain:	4VA
Operating resistance range:	2K ON, 5K OFF to 20K ON, 59K OFF
Sensing delay:	500 msec typical
Output rating:	SPCO relay rated at 5A/240Vac/30Vdc resistive
Electrical life:	100,000 ops at rated load
Ambient range:	-10 to 60°C non-condensing
Approvals:	Conforms to CE emc EN50081-1 & EN50082-1 and low voltage EN61010-1 directives
Weight:	200gms

CONNECTION DIAGRAM

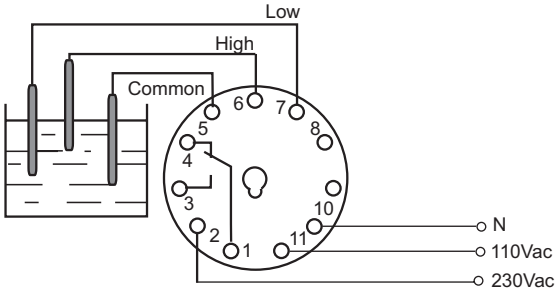

DIMENSIONS

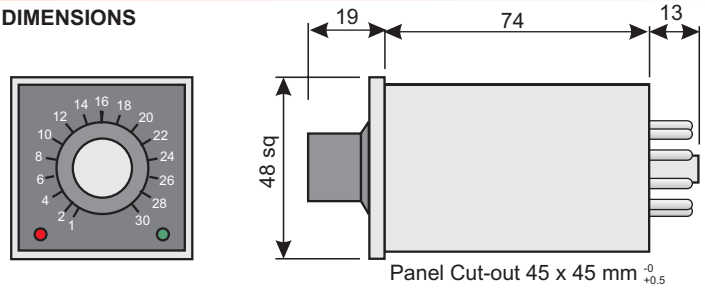

STANDARD ITEM

Type	Part Number
Differential Level sensor	FLDT-110/230VAC

Note: For suitable panel mounting or DIN rail sockets see page 33.

T3S ON/OFF & PROPORTIONAL TEMPERATURE CONTROLLER



The T3S range of temperature controllers offer easy to set, non programmable digital on/off or proportional control. Options are available for J/K thermocouples and PT100 RTDs inputs with either relay or SSR drive outputs.

- Selectable on/off or proportional action
- Upto 800°C scale ranges
- J, K T/couple or PT100 input options
- Relay or SSR drive output options

SPECIFICATION

Supply voltage:	90 to 264Vac/dc @ 50/60 Hz
Power drain:	5VA max.
Scale accuracy:	+/- 1% of FSD
Scale ranges:	PT100: 99.9, 199, 399°C J T/c: 199, 399°C K T/c: 399, 799°C
Max ext. resist:	T/couple: 100 , PT100: 5 per wire
Control band:	On/Off: Hysteresis = 0.2 to 0.5% of scale range Propl: Propl. band = up to 3% of scale range
Reset adjust:	+/-3% of scale range
Output rating:	Relay: 2A/240Vac resistive SSR: 20mA/12Vdc
Electrical life:	100,000 ops at rated load
Ambient range:	-10 to 50°C non condensing

CONNECTION DIAGRAM

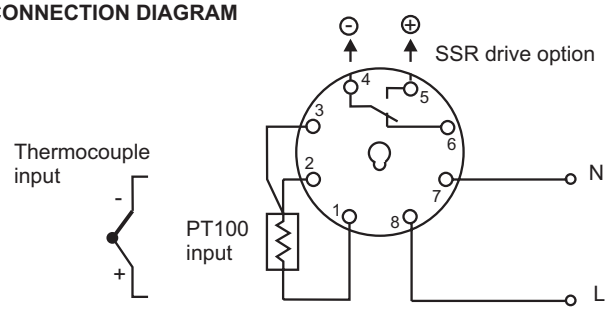

DIMENSIONS

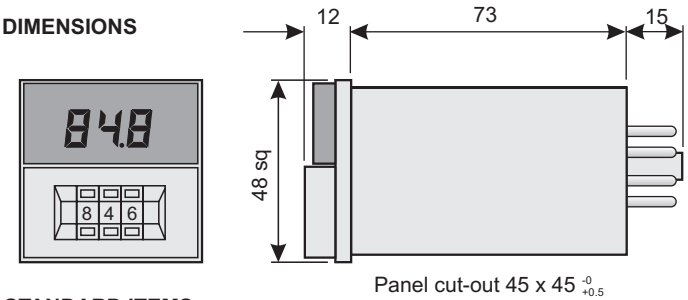

STANDARD ITEMS

Input	Output	Range	Part Number
J T/c	Relay	0 to 199°C	T3S-B4RJ2C
J T/c	Relay	0 to 399°C	T3S-B4RJ4C
K T/c	Relay	0 to 399°C	T3S-B4RK4C
K T/c	Relay	0 to 799°C	T3S-B4RK8C

For suitable panel mounting or DIN rail wiring sockets see page 33.

DTC410 ON/OFF TEMPERATURE CONTROLLER



The DTC410 range of on/off temperature controllers are designed to offer the programmable functionality of modern PID controllers but at a price suited to on/off applications. The clear LCD display and 2-button programming gives an easy to use set-up procedure. Message displays also provide a clear indication of alarms or error status. For the matching UDT timer see page 8.

- 4 programmable thermocouple inputs
- 10 programmable alarm options
- Programmable set-point limits
- PT100 & 4-20mA inputs
- Direct or reverse action

SPECIFICATION

Supply voltage:	24Vac/dc @ 60mA max. 110Vac, 50/60 Hz @ 1.5VA max. 220-240Vac, 50/60 Hz @ 1.5VA max.
Sensor options:	J, K, T, N T/couples, PT100 and 4-20mA
Scale ranges:	J T/c = -99 to 700°C (999°F) T T/c = -99 to 300°C (570°F) K/N T/c = -99 to 999°C or F PT100 = -99 to 400°C (700°F) 4-20mA = scalable -99 to 999 units
Gain accuracy:	T/c = +/- 0.25% of scale range Others = +/- 0.6% of scale range
Offset accuracy:	T/c = +/- 5°C, PT100 = +/- 2°C
Outputs:	Control: 3A @ 240Vac, SPCO relay Alarm: 0.5A @ 120Vac, SPNO relay
Approvals:	Conforms to CE generic standards EN50081-1 and EN50082-1 for emc and EN61010-1 for low voltage
Ambient range:	-10 to 50°C non-condensing
Memory back-up:	Lithium battery with 10 years operating life
Weight:	205gms

CONNECTION DIAGRAM

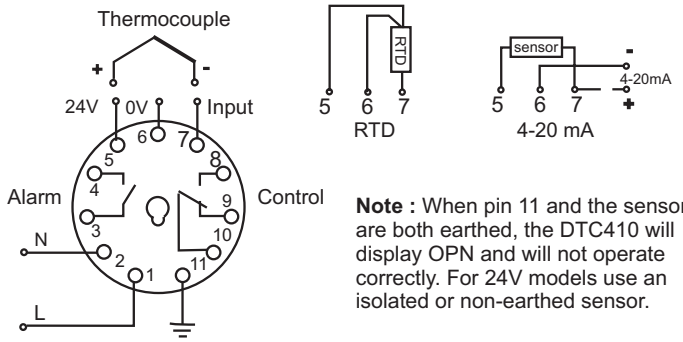

Note : When pin 11 and the sensor are both earthed, the DTC410 will display OPN and will not operate correctly. For 24V models use an isolated or non-earthed sensor.

DIMENSIONS

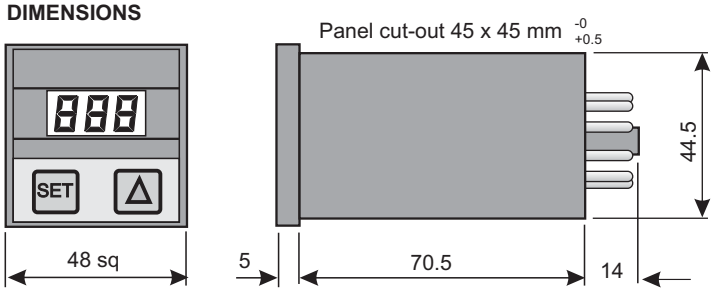

STANDARD ITEMS

Input	Voltage	Part Number
Thermocouple	24Vac/dc	DTC410-01-24
	110Vac	DTC410-01-110
	230Vac	DTC410-01-230
PT100	24Vac/dc	DTC410-02-24
	110Vac	DTC410-02-110
	230Vac	DTC410-02-230
4-20 mA	24Vac/dc	DTC410-03-24
	110Vac	DTC410-03-110
	230Vac	DTC410-03-230

For suitable panel mounting or DIN rail wiring sockets see page 33. For thermocouples, PT100 and other applicable types of sensor see page 26.

PJ32 ON/OFF REFRIGERATION CONTROLLER



These controllers are designed specifically for normal and low temperature refrigeration units with static or ventilated evaporators. The front panel comes in a range of colours or can be custom designed. Versions are available with 1, 2 and 3 relay outputs, 1 and 2 NTC, 1 PTC and an optional digital input. The PJ32 can be powered from either 12Vac/dc or 230Vac supplies.

- NTC or PTC input options
- 12Vac/dc or 230Vac power supply
- Front panel mounting system
- Fast set up using programme key
- Custom front panels available
- Up to 3 relay outputs
- Serial connection/HACCP option

SPECIFICATION

Supply voltage :	12Vac/dc or 230Vac
Power drain :	3VA
Sensor options :	NTC or PTC
Scale range :	-50 to 90ºC
Accuracy :	NTC +/-1ºC PTC +/-3ºC
Outputs :	S0E : 8A SPST relay S0P/S1P : 16A SPST relay S2,X,Y : 1 SPCO and 1SPST 8A relays C : 2 SPST 5A and 1 SPST 8A relays
Approvals:	Conforms to CE generic standards EN50081-1 and EN50082-1 for emc and EN61010-1 for low voltage
Ambient range:	-10 to 50°C <80% rH non-condensing
Weight:	150gms

Part Numbering Options : PJ32 A B C D

A	Refrigeration unit type	S Y X C	Static units above 0ºC Static units below 0ºC Static units below 0ºC ventilated units below 0ºC
B	Digital input	0 1 2	No digital input Digital input Digital input + alarm output
C	Controller type	E 0 P	Economic Top version Top version 16A relays & buzzer
D	Power supply	L 0	12Vac/dc 230Vac

Note : All top versions include serial and HACCP link, quick mounting system, back-lit key pad and removable terminals.

CONNECTION DIAGRAMS

PJ32 S0E

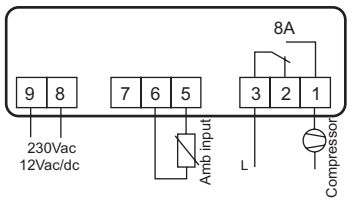

PJ32 S0 & S1

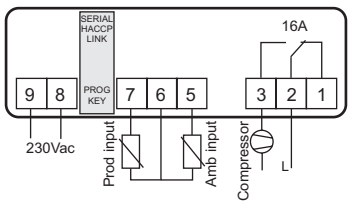

PJ32 S2

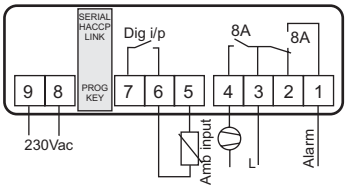

PJ32 X & Y

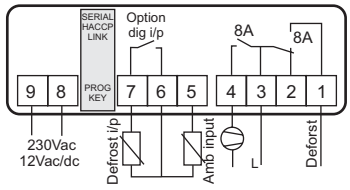

PJ32C

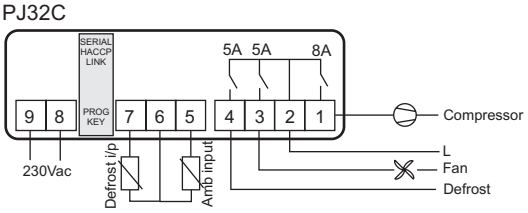

DIMENSIONS

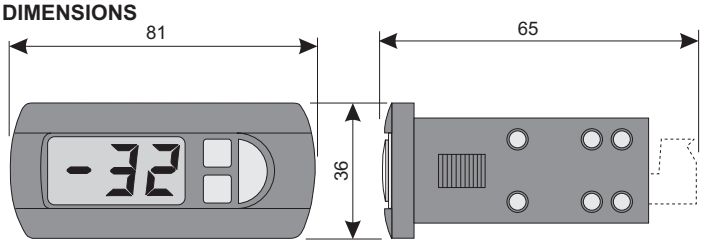

PANEL CUT OUT : 71 x 29mm

STANDARD ITEMS

Version	Voltage	Unit type	Inputs	Part Number
Basic	12Vac/dc	Static>0ºC	1 NTC	PJ32S0EL
Basic	230Vac	Static>0ºC	1 NTC	PJ32S0E0
Top	230Vac	Static>0ºC	1 NTC	PJ32S000
Top	230Vac	Static>0ºC	2 NTC	PJ32S0P0
Top	230Vac	Static>0ºC	1 NTC,1 dig	PJ32S200
Basic	12Vac/dc	Static<0ºC	2 NTC	PJ32Y0EL
Top	230Vac	Static<0ºC	2 NTC	PJ32Y000
Top	230Vac	Static<0ºC	1 NTC, 1 dig	PJ32X100
Top	230Vac	Ventilated<0ºC	2 NTC	PJ32C000
Programming key				PJOPZKEY00
RS485 serial module				PJOPZ48500
HACCP module				PJOPZHACP0

For models with PTC probe inputs, digital input options, alternative or customised front panels, please contact our sales office. For suitable NTC and PTC probes see page 26.

IR32 ON/OFF REFRIGERATION CONTROLLER



The IR32 series temperature controllers were designed specifically for refrigeration and food processing applications and therefore use the NTC sensor, ideal for operation over the temperature range -50 to +90ºC. Three models provide the flexibility of controlling either 'static' refrigeration units with defrost by timed compressor-off state or by a separate defrost sensor or for ventilated units where an additional output drives an evaporator fan. Remote control via a PC or the hand held infra-red remote programmer provides added ease of setting.

- Simple programming of regulator, compressor, defrost & alarm settings
- 1, 2 or 4 output options
- Single or dual NTC probe input
- 8 Amp @ 250Vac relay outputs
- Infra-red, hand-held remote control programming option - see page 39
- RS232/485 programming and data analysis via serial link
- IP65 water and dust protection
- CE approval for emc and low voltage directives

Model Descriptions

Model No	Description
IR32S0LBR0	Single relay compressor output and control set-point suitable for 'static' refrigeration systems where the defrost cycle can be timed during the compressor 'off' state.
IR32Y0LBR0	Dual relay output, one to drive a compressor and the other an electrical heater or hot gas defrost system. Each is controlled from separate NTC sensors with independent set-points.
IR32C0LBR0	4 relay outputs to drive a compressor, defrost heater and ventilation fan. The fourth output may be used to drive an indicator lamp or as an alarm. Two NTC sensors and independent set-points provide flexible and accurate control.

SPECIFICATION

Inputs:	1 or 2 NTC sensor (PTC available on request)
Scale range:	NTC = - 40 to 90˚C
	PTC = - 40 to 120˚C
Accuracy:	+/- 1% of scale range
Outputs:	IR32S: SPCO relay
	IR32Y: 2 x SPCO relay
	IR32C: 4 x SPCO relay
Output ratings:	8A @ 250Vac (10 A inrush)
Supply:	12-24Vac/dc (110Vac & 240Vac via transformers TRA11 and TRA12 - see page 33)
Supply drain:	3VA max.
Protection:	IP65
Approval:	Conform to CE emc EN50081-1 & EN50082-1 and low voltage EN61010-1 directives.
Ambient range:	0 to 50˚C
Weight:	IR32S: 160 gms
	IR32Y: 180 gms
	IR32C: 220 gms

CONNECTION DIAGRAM

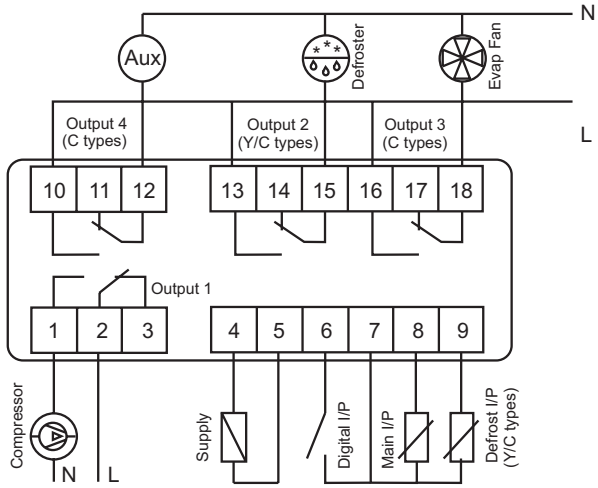

DIMENSIONS

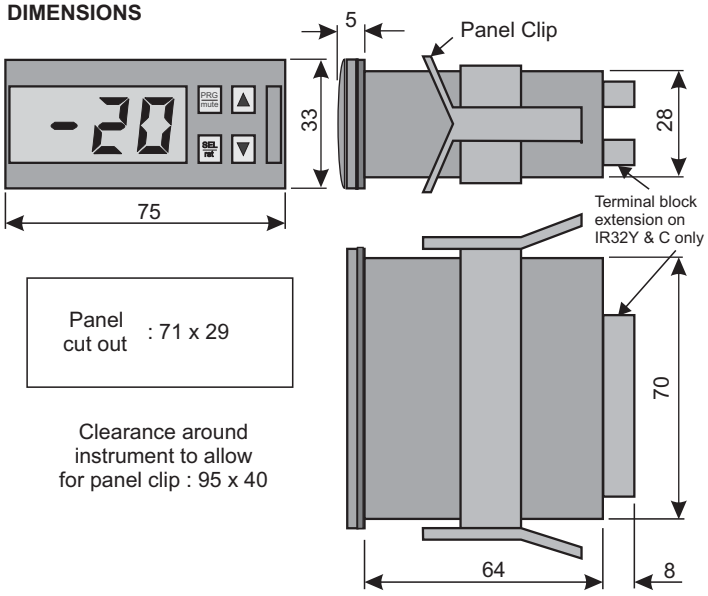

Panel cut out : 71 x 29

Clearance around instrument to allow for panel clip : 95 x 40

STANDARD ITEMS

Control Type	Part Number
1 Relay, timed defrost	IR32S0LBR0
2 Relays, temperature defrost	IR32Y0LBR0
4 Relays, ventilated temperature defrost	IR32C0LBR0

For power supply transformers and IR remote controls see page 33. For NTC and PTC sensors see page 26. For matching timers see page 8.

MICRO-CHILLER AIR-CONDITIONING CONTROLLERS



The µchiller compact has been specifically designed to control chillers and single compressor heat pumps. It will control air to air, air to water and water to water units with gas or water reversibility. The µchiller expansion boards allow full control of chillers with 1 or 2 hermetic compressors working also as heat pumps. A remote wall mounted terminal unit and fan speed control modules are also available as part of the µchiller range.

- Controls AHUs, chillers and single compressor heat pumps
- Expansion board for 1 and 2 hermetic compressor control
- Wall mounted remote terminal unit

SPECIFICATION

Supply :	24Vac+/-10%, 50/60Hz
Power drain :	3W
Inputs :	3 x NTC probe (3/5 x NTC on expansion cards) 5 x volt free contacts (7/11 on expansion cards)
Outputs :	5 NO relays 2A res @ 250Vac (5/8 on exp cards) 1 Pulse modulation (1/2 on expansion cards)
Protection :	µchiller compact : IP55 Wall mounted terminal : IP30
Ambient range :	µchiller compact : -10 to 60ºC < 90%rH Expansion boards : -10 to 60ºC < 90%rH Wall mounted terminal : 0 to 50ºC < 90% rH
Weight :	µchiller compact : 250gms Main board : 150gms Expansion board : 120gms Wall mounted terminal : 270gms

CONNECTION DIAGRAMS

µChiller Compact

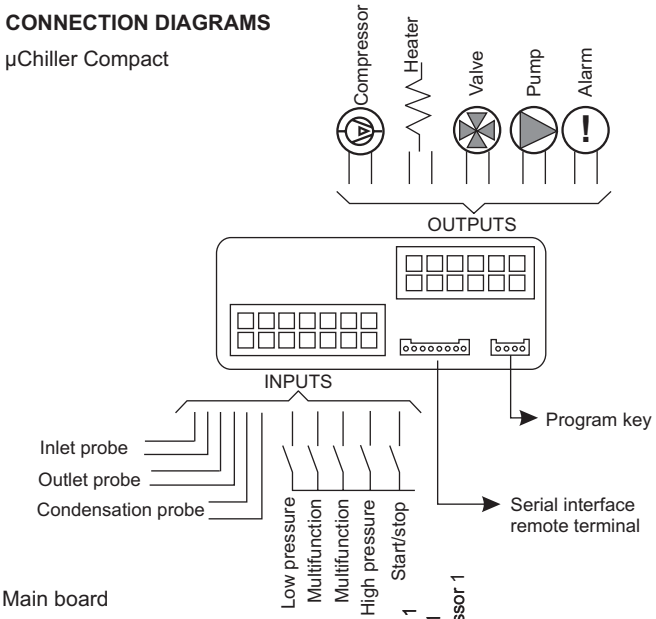

Main board

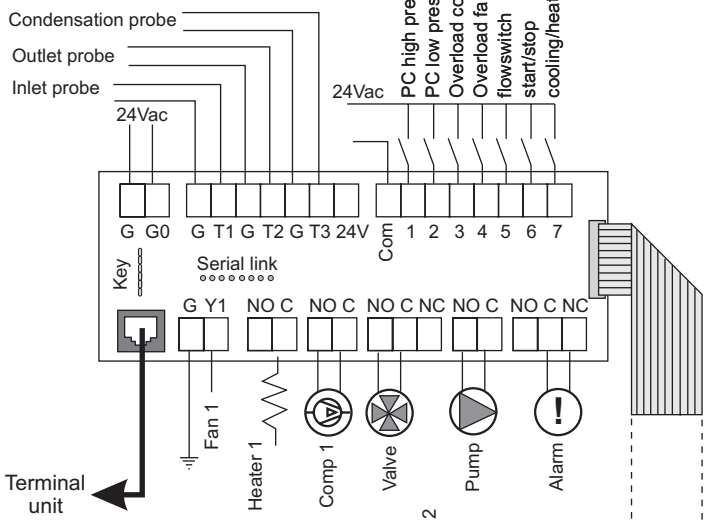

Expansion Board

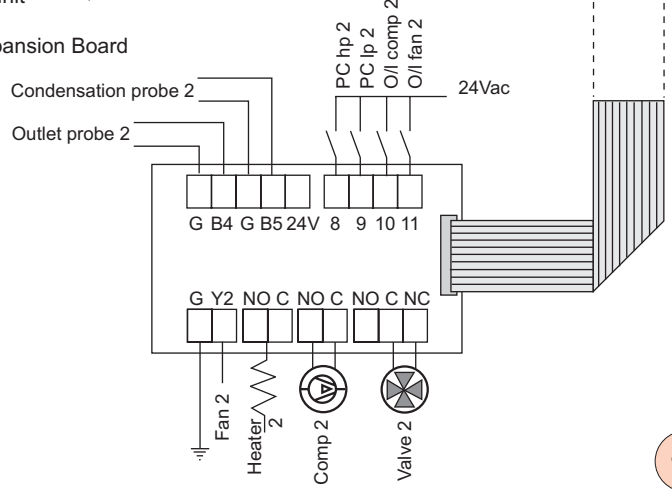

DIMENSIONS

µChiller compact

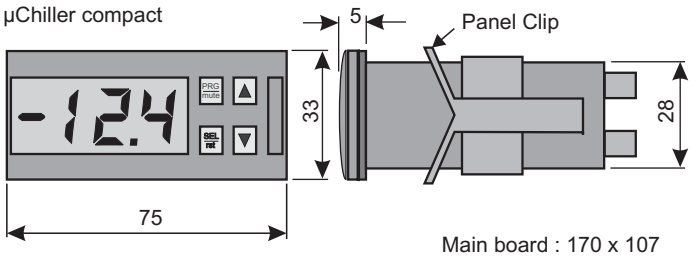

Main board : 170 x 107
Expansion board : 82 x 107
Wall mounted remote terminal : 115 x 76 x 31

STANDARD ITEMS

Item	Options	Part Number
µChiller compact	-	MCHSML000M
µChiller compact	Buzzer, IR control	MCHSML0010
µChiller main board	Screw terms	MCHCOMP1B0
µChiller expansion board	Screw terms	MCHCOMP2B0
Panel mounted remote terminal	-	MCHTER00L0
Wall mounted remote terminal	-	MCHTER00C0
Serial Interface	-	MCHSMLSER0
Remote module	-	MCHREB000
Pressure module	-	MCHSML4200
Program hardware key	-	MCHSMLKEY0

To connect a wall mounted remote terminal a serial interface is required for the µchiller compact whereas a remote module is needed for the main board. The pressure module will allow connection of a suitable pressure transducer to the µchiller compact (SPK - see page 26) for condenser pressure control.

IR32 ON/OFF & PI TEMPERATURE & PROCESS CONTROLLER



The IR32 series temperature controllers, with their analogue, thermocouple and RTD inputs and relay or SSR drive output options, combine simple control and programmability with flexibility of use for a wide range of applications. They are available with 1, 2 or 4 outputs /set-points,can be configured for 9 different control modes including on/off, P or PI action and can be used to control temperature, humidity, air pressure or other media using suitable sensors - see pages 26-27 for details.

- 9 pre-set control modes
- Temperature, humidity or air-pressure input sensor options
- 1, 2 or 4 output/set-point options
- Relay or SSR drive output options
- Infra-red, hand-held remote control programming option - see page 33
- RS232/485 programming and data analysis via serial link
- IP65 water and dust protection
- CE approval for emc and low voltage directives
- Programmable advanced control options

SPECIFICATION

Supply:	12-24Vac/dc +/- 10% - for transformers see page 33	
Supply drain:	3VA max.	
Probe supply:	10Vdc @ 30mA internal	
Inputs:	Sensor: 1 or 2 NTC, PT100, J, K T/c, 4-20mA, -0.5 to 1V	
Digital input:	Programmable function to switch between set-points or to act as an alarm condition.	
Scale range:	NTC :	-40 to 90°C
	Pt100 :	-99 to 600°C
	J T/c :	-99 to 800°C
	K T/c:	-99 to 999°C
	mA/V :	-99 to 999 units
Accuracy:	+/- 0.5% of scale range	
Output types:	See connection diagrams	
Output ratings:	Relay:	8A @ 250Vac (10 A inrush)
	SSR:	10V/25mA
Protection:	IP65	
Approval:	Conform to CE emc EN50081-1 & EN50082-1 and low voltage EN61010-1 directives.	
Ambient range:	0 to 50°C @ 90% rH (non-condensing)	
Weight:	IR32A:	240 gms
	IR32D:	200 gms
	IR32V:	200 gms
	IR32W:	220 gms
	IR32Z:	240 gms

Part Numbering Options : IR32 A B C 000

A	Outputs	1 Relay 2 Relays 4 Relays 1 SSR 4 SSRs	8A/250Vac " " 10V/25mA "	V W Z D A
B	Input	NTC probe PT100 probe J/K Thermocouple Current Voltage	-50 to 90ºC -99 to 600ºC 0 to 999ºC 4 to 20mA -0.5 to +1V	0 1 2 3 4
C	Options	Economic (V0 only) Standard "	No IR sensor or buzzer IR sensor & buzzer IR sensor & buzzer	E L 0

CONNECTION DIAGRAMS

NTC/Relay Versions

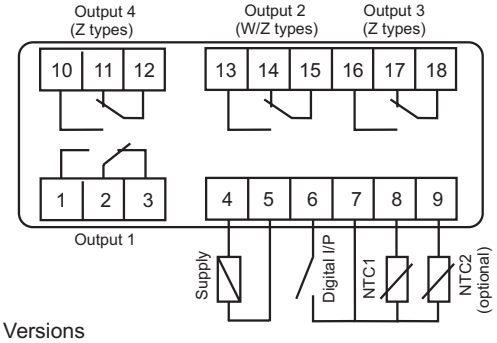

NTC/SSR Versions

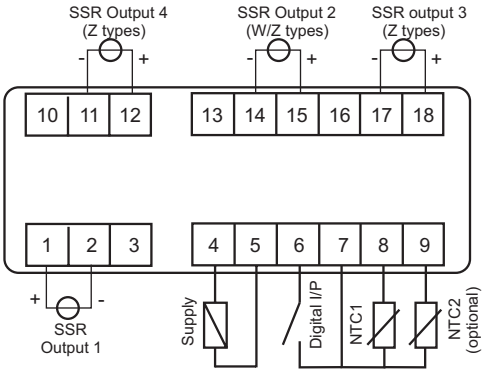

T/C, Voltage & Current Input/Relay Versions

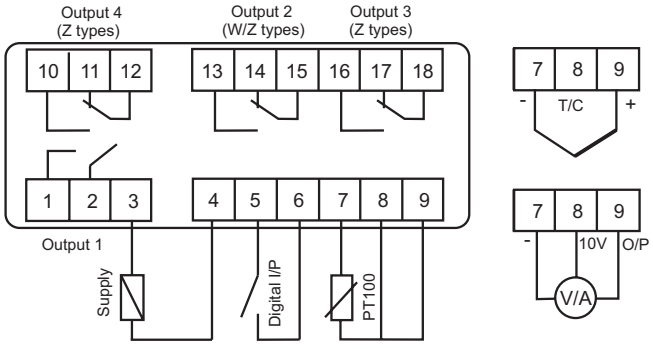

T/C, Voltage and Current Input/SSR Versions

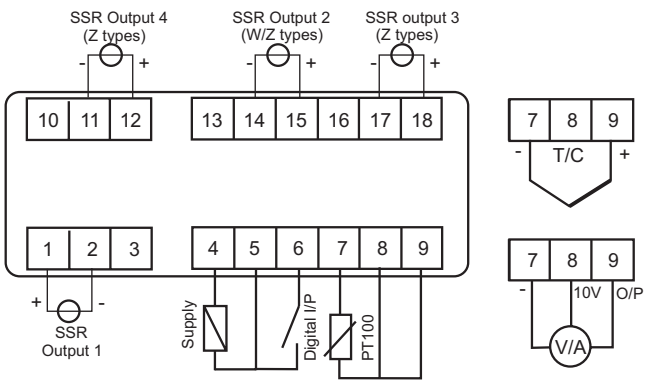

DIMENSIONS

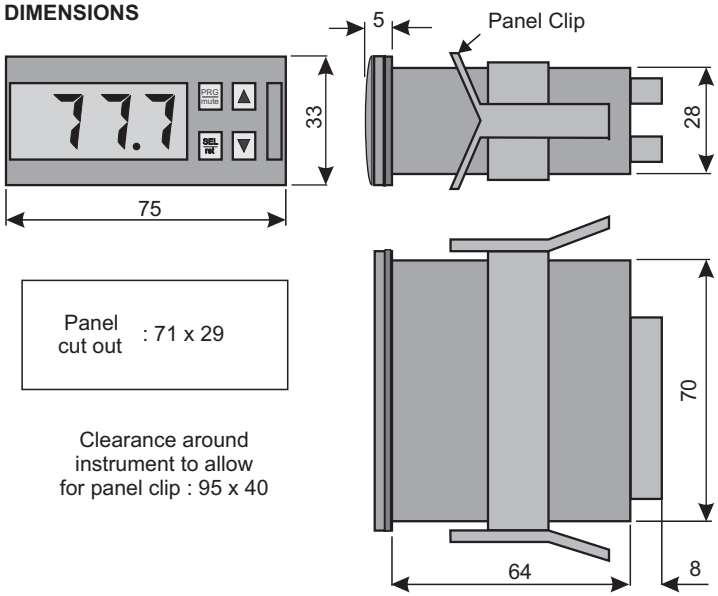

Panel cut out : 71 x 29

Clearance around instrument to allow for panel clip : 95 x 40

STANDARD ITEMS

OutputType	Input Type	Part Number
1 Relay	NTC, economic	IR32V0E000
	NTC	IR32V0L000
	PT100	IR32V1L000
	J/K thermocouple	IR32V2L000
	4-20mA	IR32V3L000
	-0.5 to 1V	IR32V4L000
2 Relays	NTC	IR32W00000
	PT100	IR32W10000
	J/K thermocouple	IR32W20000
	4-20mA	IR32W30000
4 Relays	PT100	IR32Z10000
	J/K thermocouple	IR32Z20000
1 SSR	PT100	IR32D1L000
	J/K thermocouple	IR32D2L000
4 SSRs	PT100	IR32A10000
	J/K thermocouple	IR32A20000

For power supply transformers and IR remote controls see page 33. For NTC and PT100 sensors and suitable thermocouples see page 26. For matching timers see page 8.

IRDR ON/OFF & PI TEMPERATURE & PROCESS CONTROLLER



The IRDR series of temperature controllers are designed specifically for in-panel, DIN-rail mounting. With their analogue, thermocouple and RTD inputs and 1, 2 & 4 output options, they combine simple control and programmability with flexibility of use for a wide range of applications. They can be configured for 9 different control modes for on/off, P or PI action and used to control temperature, humidity, air-pressure or other media with suitable transducers - see page 26-27 for details.

- DIN-rail mounting
- 9 programmable control modes
- Temperature, humidity or air-pressure input sensor options
- 1, 2 or 4 output/set-point options
- 2 Digital inputs to select temperatures or activate alarms.
- Infra-red, hand-held remote control programming option
- RS232/485 programming and data analysis via serial link
- CE approval for emc and low voltage directives
- Dual 12-24Vac/dc and 240Vac supply inputs (not all models)

SPECIFICATION

Supply voltage:	12-24Vac/dc +/- 10% - for transformers see page 33	
Supply drain:	3VA max.	
Inputs:	Sensor: 1 or 2 NTC, PT100, J, K t/c, 4-20mA, -0.5 to 1V	
Digital inputs:	2 - programmable function to switch between set-points or to act as an alarm.	
Scale range:	NTC :	-40 to 90°C
	Pt100 :	-99 to 600°C
	J T/c :	-99 to 800°C
	K T/c:	-99 to 999°C
	mA/V :	-99 to 999 units

Accuracy:	+/- 0.5% of scale range
Output types:	See connection diagrams
Output ratings:	Relay: 8A @ 250Vac (10 A inrush) SSR: 10V/25mA
Probe supply:	10Vdc @ 30mA internal
Protection:	IP40
Approval:	Conforms to CE emc EN50081-1 & EN50082-1 and low voltage EN61010-1 directives.
Ambient range:	0 to 50°C @ 90% rH (non-condensing)
Weight:	IRDRV : 220 gms IRDRW : 240 gms

CONNECTION DIAGRAM

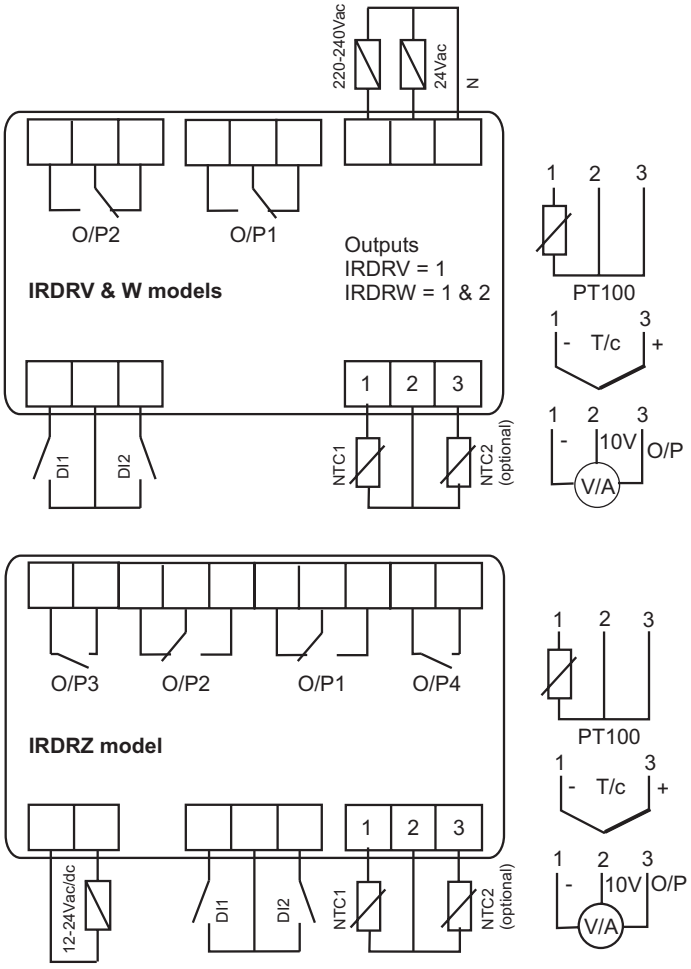

DIMENSIONS

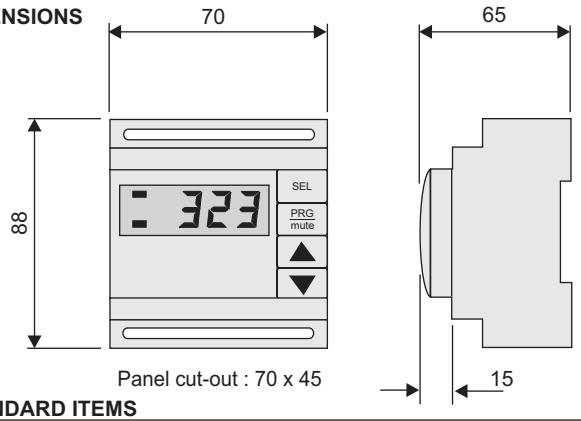

STANDARD ITEMS

Output Type	Input Type	Part Number
1 relay	NTC	IRDRV00000
	PT100	IRDRV10000
	J/K thermocouple	IRDRV20000
2 relays	NTC	IRDRW00000
	PT100	IRDRW10000
	J/K thermocouple	IRDRW20000
4 relays	PT100	IRDRZ10000
	J/K thermocouple	IRDRZ20000
Wall mounting enclosure		GR15070P

For IR remote controls see page 33. For suitable NTC and PT100 sensors and thermocouples see page 26.

OUTPUT CONVERSION MODULES



These modules can be connected to the SSR output of an IR32 or IRDR controller and will convert the 10V PWM output into a 0-10V, 4-20mA or on/off relay output. All models operate from a 24Vac supply voltage. Whilst they were designed specifically for use with the IR range of temperature controllers, they can be used in conjunction with any controller that has a 10Vdc PWM or 10Vdc on/off output.

- Converts SSR control output to 0-10V, 4-20mA or on/off relay output
- DIN rail mounting

SPECIFICATION

Supply voltage :	24Vac +/- 10% 50/60Hz
Power drain :	50mA max (30mA On/Off version)
Input :	CONV0/10A : 10VdcPWM,10/20mA, impedance 200 min time 8ms, max time 0.2s CONVONOFF : 10Vdc on/off 10/20mA imp 200
Output :	CONV0/10A : voltage : 0-10V, 5mA max current : 4-20mA 7Vdc max response time 1.2 secs CONVONOFF : SPCO relay 10A @ 250Vac resistive
Ambient range :	0 to 50ºC 90%rH (non condensing) operating -10 to 70ºC 90%rH storage
Protection level :	IP20
Weight :	80gms

CONNECTION DIAGRAMS

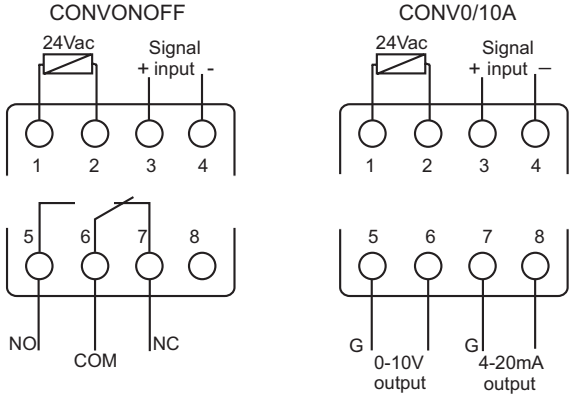

DIMENSIONS

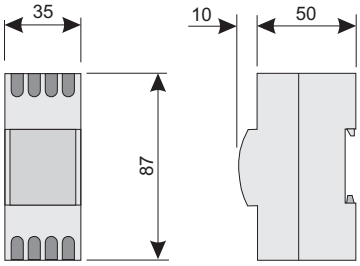

STANDARD ITEMS

Input	Output	Part Number
10VdcPWM	0-10V/4-20mA	CONV0/10A
10Vdc on/off	SPCO relay	CONVONOFF

C1 1/32 DIN PID TEMPERATURE & PROCESS CONTROLLER

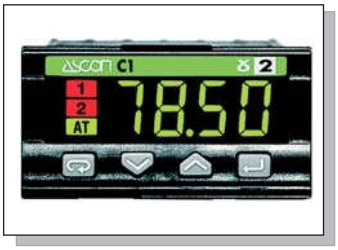

These microprocessor based PID auto-tune controllers are simple to configure and operate. Covering the standard range of input sensors with control and alarm outputs, continuous retransmission, custom linearisation and optional serial communications, the C1 series controller combines flexibility with an extremely compact 1/32 DIN 48 x 24mm package.

- Fuzzy autotune and adaptive algorithms
- Relay or triac + SSR output
- IP65 front panel protection
- Programmable alarms
- Clear 4 digit LED display
- Transmitter power supply

SPECIFICATION

Power supply :	100 - 240Vac @ 50/60Hz, 24Vac @50/60Hz, 24Vdc
Supply variation :	-15% +10% of supply voltage
Input sensors :	J, K, L, T, S thermocouples, PT100, 0/4 to 20mA, 0/10 to 50mV
Scale ranges :	PT100 -99.9 to 300ºC PT100 -200 to 600ºC L & J t/c 0 to 600ºC T t/c -200 to 400 ºC K t/c 0 to 1200ºC S t/c 0 to 1600ºC
Operating modes :	Indicator with 2 alarms 1 PID or on/off loop with 1 alarm
Accuracy :	+/- 0.25% of scale range +/- 1 digit (RTD & t/c) +/- 0.1% of scale range (mA & mV)
Output 1 :	SPST N.O. relay 2A/250Vac resistive or Triac 2A/250Vac for contactor coil
Output 2 :	SSR drive 0-5Vdc +/-10%, 30mA max, not isolated
Serial interface :	RS485 isolated for Modbus/Jbus protocols
Auxilliary supply :	18Vdc +/-20%, 30mA max for transmitter supply
Approvals :	Conforms to CE standards EN50081-1 and EN50082-1 for emc and EN61010-1 for low voltage.
Protection :	IP65
Ambient temp :	0 to 50ºC non condensing
Weight :	100gms

Part Numbering Options : C1- A B C D -0000

A	Power supply	100 - 240Vac 24Vac/dc	3 5
B	Output 1	Relay Triac	0 3
CD	Options	None Auxilliary transmitter power supply Aux power supply+ PV retransmission RS485 RS485 + aux power supply	00 06 07 50 56

CONNECTION DIAGRAM

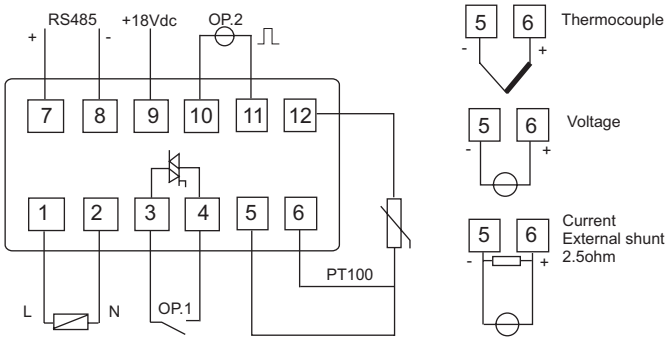

DIMENSIONS

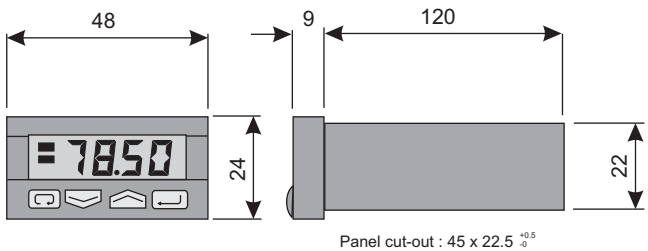

STANDARD ITEMS

Voltage	Output 1	Comms	Part Number
100-240Vac	Relay	None	C1-3000-0000
100-240Vac	Relay	RS485	C1-3050-0000
100-240Vac	Triac	None	C1-3300-0000
24Vac/dc	Relay	None	C1-5000-0000
24Vac/dc	Relay	RS485	C1-5050-0000

For suitable input sensors see page 26.

M1 1/16 DIN PID TEMPERATURE & PROCESS CONTROLLER



These microprocessor based PID autotune controllers are simple to configure and operate. With a single clear 4 digit LED display, 1 control and 1 alarm output, the M1 series is an economical solution to PID control problems in a standard 1/16 DIN 48 x 48mm package. Suitable for use with the standard range of input sensors, the M1 has optional PV re-transmission and serial communications.

- Fuzzy autotune and adaptive algorithms
- Relay or triac + SSR output options
- IP65 front panel protection
- Programmable alarms
- Single 4 digit LED display
- Transmitter power supply

SPECIFICATION

Power supply :	100 - 240Vac @ 50/60Hz, 24Vac @50/60Hz, 24Vdc
Supply variation :	-15% +10% of supply voltage
Input sensors :	J, K, L, T, S Thermocouples, PT100, 0/4 to 20mA, 0/10 to 50mV
Scale ranges :	PT100 -99.9 to 300ºC PT100 -200 to 600ºC L & J t/c 0 to 600ºC T t/c -200 to 400 ºC K t/c 0 to 1200ºC S t/c 0 to 1600ºC
Accuracy :	+/- 0.25% of scale range +/- 1 digit (RTD & t/c) +/- 0.1% of scale range (mA & mV)
Operating modes :	Indicator with 2 alarms 1 PID or on/off loop with 1 alarm
Output 1 :	SPST N.O. relay 2A/250Vac resistive or Triac 1A/250Vac for contactor coil
Output 2 :	SSR drive 0-5Vdc +/-10%, 30mA max, not isolated and SPST N.O. relay 2A/250Vac resistive
Serial interface :	RS485 isolated for Modbus/Jbus protocols
Auxilliary supply :	18Vdc +/-20%, 30mA max for transmitter supply
Approvals :	Conforms to CE standards EN50081-1 and EN50082-1 for emc and EN61010-1 for low voltage.
Ambient temp :	0 to 50ºC non condensing
Weight :	130gms

Part Numbering Options : M1- A B C D -0000

A	Power supply	100 - 240Vac 24Vac/dc	3 5
B	Output 1	Relay Triac	0 3
CD	Serial comms	None Aux transmitter power supply Aux power supply + PV retransmission RS485 RS485 + aux power supply	00 06 07 50 56

CONNECTION DIAGRAM

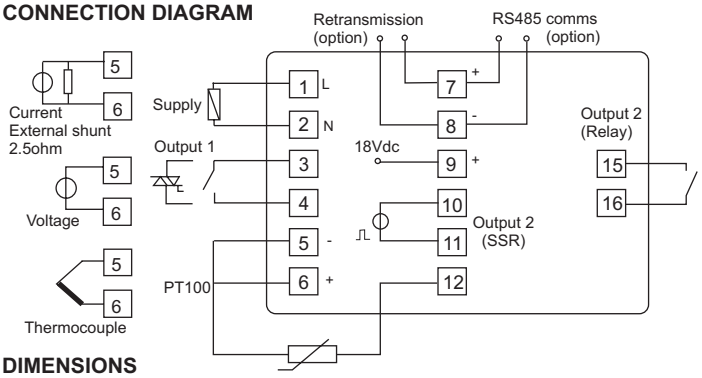

DIMENSIONS

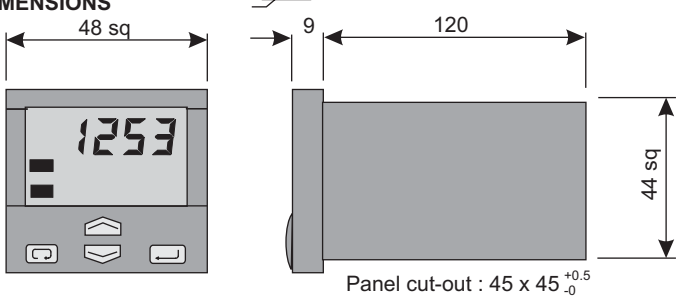

STANDARD ITEMS

Voltage	Output 1	Comms	Part Number
100-240Vac	Relay	None	M1-3000-0000
100-240Vac	Relay	RS485	M1-3050-0000
100-240Vac	Triac	None	M1-3300-0000
24Vac/dc	Relay	None	M1-5000-0000
24Vac/dc	Relay	RS485	M1-5050-0000

For suitable input sensors see page 26

M3 1/16 DIN PID TEMPERATURE & PROCESS CONTROLLER



These microprocessor based PID autotune controllers are simple to configure and operate. With a dual 4 digit LED display, showing set point and process value, up to 2 PID control outputs and 1 alarm output, the M3 series is a sophisticated PID controller. Housed in a standard 1/16 DIN 48 x 48mm package and suitable for use with the standard range of input sensors, the M3 has optional PV re-transmission and serial communications.

- Fuzzy autotune and adaptive algorithms
- Programmable alarm functions
- Dual 4 digit LED display
- Transmitter power supply
- Up to 2 PID control outputs
- Relay or triac + SSR outputs
- IP65 front panel protection
- Serial communications

SPECIFICATION

Power supply : 100 - 240Vac @ 50/60Hz, 24Vac @50/60Hz, 24Vdc
Supply variation : -15% +10% of supply voltage
Input sensors : J, K, L, T, S Thermocouples, PT100, 0/4 to 20mA, 0/10 to 50mV
Scale ranges :

PT100	-99.9 to 300ºC
PT100	-200 to 600ºC
L & J t/c	0 to 600ºC
T t/c	-200 to 400 ºC
K t/c	0 to 1200ºC
S t/c	0 to 1600ºC

Accuracy : +/- 0.25% of scale range +/- 1 digit (RTD & t/c)
+/- 0.1% of scale range (mA & mV)
Operating modes : 1 PID or on/off loop with 2 alarms
2 PID or on/off heat-cool loops with 1 alarm
Output 1/3 : SPST N.O. relay 2A/250Vac resistive or Triac 1A/250Vac for contactor coil
Output 2 : SSR drive 0-5Vdc +/-10%, 30mA max, not isolated and SPST N.O. relay 2A/250Vac resistive
Serial interface : RS485 isolated for Modbus/Jbus protocols
Auxilliary supply : 18Vdc +/-20%, 30mA max for transmitter supply
Approvals : Conforms to CE standards EN50081-1 and EN50082-1 for emc and EN61010-1 for low voltage.
Protection : IP65
Ambient temp : 0 to 50ºC non condensing
Weight : 130gms

Part Numbering Options : M3- A B C D -0000

A	Power supply	100 - 240Vac 24Vac/dc	3 5
B	Output 1/ 3	Relay/Relay Relay/Triac Triac/Relay Triac/Triac	1 2 4 5
CD	Options	None Current transformer input Aux transmitter power supply Aux power supply + PV retransmission Aux supply + current transformer RS485 RS485 + aux power supply RS485 + current transformer	00 03 06 07 08 50 56 58

CONNECTION DIAGRAM

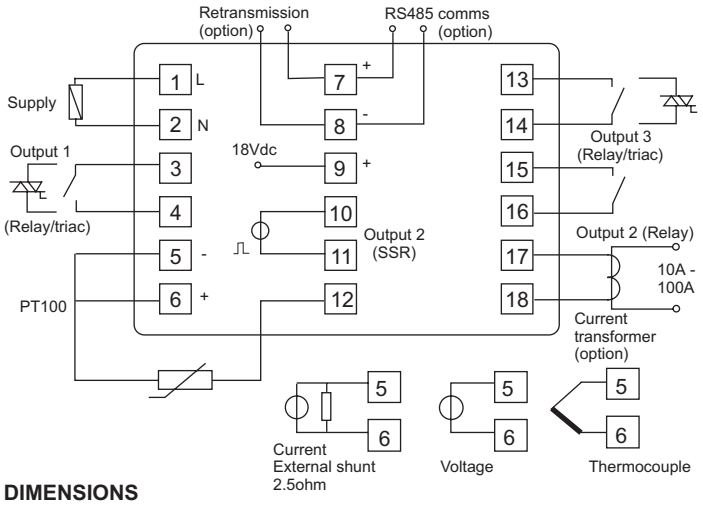

DIMENSIONS

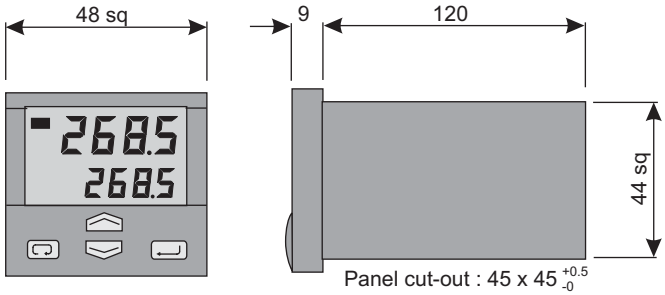

STANDARD ITEMS

Voltage	Output 1/3	Comms	Part Number
100-240Vac	Relay/relay	None	M3-3100-0000
100-240Vac	Relay/relay	RS485	M3-3150-0000
100-240Vac	Relay/triac	None	M3-3200-0000
24Vac/dc	Relay/relay	None	M3-5100-0000
24Vac/dc	Relay/relay	Rs485	M3-5150-0000

For suitable input sensors see page 26.

M4 1/16 DIN PID TEMPERATURE & PROCESS CONTROLLER



These microprocessor based PID autotune controllers are simple to configure and operate. With a dual 4 digit LED display, showing set point and process value, up to 2 PID control outputs, 1 alarm output and ramp/dwell functions the M4 series is a sophisticated PID controller. Housed in a standard 1/16 DIN 48x48 package and suitable for use with the standard range of input sensors, the M4 has an optional 4-20mA analogue output and serial communications.

- Fuzzy autotune and adaptive algorithms
- Ramp and dwell functions
- Relay or triac + SSR output
- Transmitter power supply
- Up to 2 PID control outputs
- Optional 4-20mA output
- IP65 front panel protection
- Serial communications

SPECIFICATION

Power supply : 100 - 240Vac @ 50/60Hz, 24Vac @50/60Hz, 24Vdc
Supply variation : -15% +10% of supply voltage
Input sensors : J, K, L, T, S Thermocouples, PT100, 0/4 to 20mA, 0/10 to 50mV
Scale ranges :

PT100	-99.9 to 300ºC
PT100	-200 to 600ºC
L & J t/c	0 to 600ºC
T t/c	-200 to 400 ºC
K t/c	0 to 1200ºC
S t/c	0 to 1600ºC

Accuracy : +/- 0.25% of scale range +/- 1 digit (RTD & t/c)
+/- 0.1% of scale range (mA & mV)
Operating modes : 1 PID or on/off loop with 2 alarms
2 PID or on/off heat-cool loops with 1 alarm
Output 1 : SPST N.O. relay 2A/250Vac resistive or Triac 1A/250Vac resistive
Output 2 : SSR drive 0-5Vdc +/-10%, 30mA max, not isolated & SPST N.O. relay 2A/250Vac resistive
Output 3 : SPST N.O. relay 2A/250Vac resistive or Triac 1A/250Vac resistive

Output 4 :	4-20 mA analogue control output (optional)
Serial interface :	RS485 isolated for Modbus/Jbus protocols
Auxilliary supply :	18Vdc +/-20%, 30mA max for transmitter supply
Approvals :	Conforms to CE standards EN50081-1and EN50082-1 for emc and EN61010-1 for low voltage.
Ambient temp :	0 to 50ºC non condensing
Weight :	130gms

Part Numbering Options : M4 - A B C D - E 000

A	Power supply	100 - 240Vac 24Vac/dc	3 5
B	Output 1/ 3	Relay/Relay Relay/Triac Triac/Relay Triac/Triac	1 2 4 5
CD	Options	None Current transformer input Aux transmitter power supply Aux power supply + control output Aux power supply + current transformer Aux supply + control o/p+ current tfmr RS485 RS485 + aux power supply RS485 + current transformer Digital input Digital input + current transformer Digital input + control output Digital i/p + control output + current tfmr	00 03 06 07 08 09 50 56 58 90 93 97 99
E	Special functions	None Start-up + timer functions	0 2

CONNECTION DIAGRAM

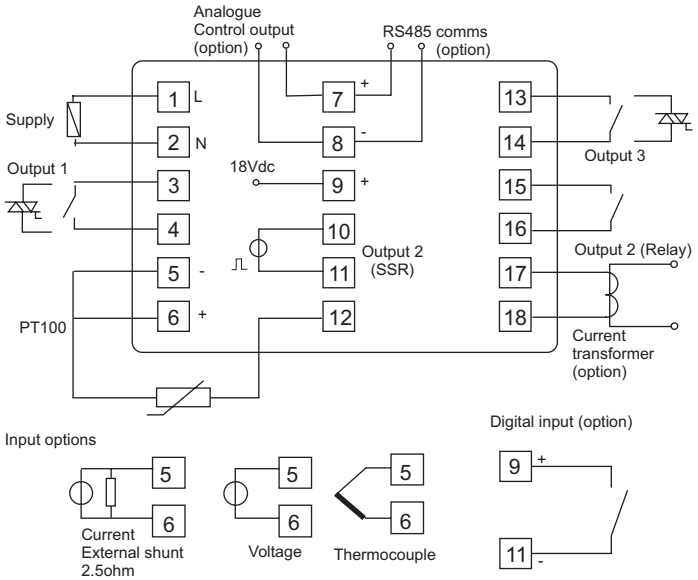

DIMENSIONS

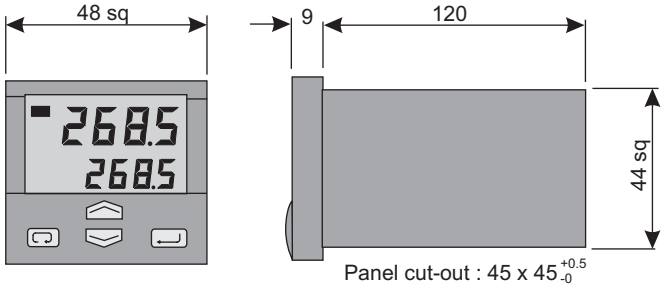

STANDARD ITEMS

Voltage	Output 1/3	Options	Part Number
100-240Vac	Relay/relay	4-20mA output	M4-3107-0000
100-240Vac	Relay/relay	RS485, DI, 4-20mA o/p	M4-3197-0000
100-240Vac	Relay/relay	RS485, DI, 4-20mA o/p, timer	M4-3197-2000
24Vac/dc	Relay/relay	4-20mA output	M4-5100-0000

For suitable input sensors see page 26.

M5 1/16 DIN PID PROCESS CONTROLLER/PROGRAMMER



The M5 series is a PID autotune set point programmer. Despite its advanced features, the M5 remains user friendly due to its simple and customisable procedures. With a sampling time of 0.1secs, up to 16 program segments, configurable outputs, programmable alarm functions and serial communi-cations facilities, the M5 is a powerful process controller/programmer in a compact 1/16 DIN 48 X 48mm package.

- Fuzzy autotune and adaptive algorithms
- Multiple outputs modes
- Ramp and dwell functions
- Transmitter power supply
- 0.1 sec sampling time
- Up to 16 program segments
- Remote set point facility
- Serial communications

SPECIFICATION

Power supply :	100 - 240Vac @ 50/60Hz, 24Vac @50/60Hz, 24Vdc
Supply variation :	-15% +10% of supply voltage
Input sensors :	J, K, L, T, S Thermocouples, PT100, 0/4 to 20mA, 0/10 to 50mV
Scale ranges :	PT100 -99.9 to 300ºC
	PT100 -200 to 600ºC
Scale ranges :	L & J t/c 0 to 600ºC
	T t/c -200 to 400 ºC
	K t/c 0 to 1200ºC
	S t/c 0 to 1600ºC
Accuracy :	+/- 0.25% of scale range +/- 1 digit (RTD & t/c)
	+/- 0.1% of scale range (mA & mV)
Operating modes :	1 P, PD, PID or on/off loop with 2 or 3 alarms
	2 P, PD, PID or on/off heat-cool loops with 1 or 2 alarms
Output 1 :	SPST N.O. relay 2A/250Vac resistive or Triac 1A/250Vac resistive
Output 2 :	SPST N. O. relay 2A/250Vac resistive or Triac 1A/250Vac resistive
Output 3 :	SPST N.O. Relay 2A/250Vac resistive
Output 4 :	4-20mA, 0-10V or potentiometer options
Serial interface :	RS485 isolated for Modbus/Jbus protocols
Auxilliary supply :	18Vdc +/-20%, 30mA max for transmitter supply
Approvals :	Conforms to CE standards EN50081-1 and EN50082-1 for emc and EN61010-1 for low voltage.
Ambient temp :	0 to 50ºC non condensing
Weight :	230gms

TYPICAL PROGRAM

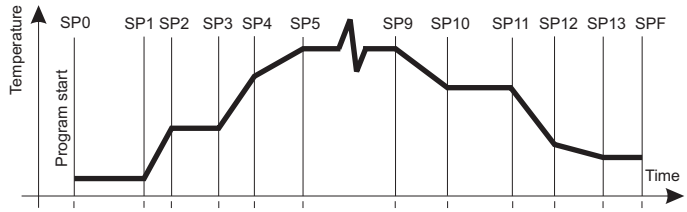

Segment	Initial	1	2	3	4	5 9	10	11	12	13	14	End
Time	t0	t1	t2	t3	t4	t5 ..... t9	t10	t11	t12	t13	t14	

Part Numbering Options : M5 - A B C D - E 000

A	Power supply	100 - 240Vac 24Vac/dc	3 5
B	Output 1/ 2	Relay/Relay Relay/Triac Triac/Relay Triac/Triac	1 2 4 5
CD	Options	None Feedback potentiometer input Remote setpoint input Current transformer input Logic/continuous output Logic/cont + remote setpoint output RS485 RS485 + feedback potentiometer input RS485 + remote setpoint input RS485 + current transformer input RS485 + Logic/continuous output	00 01 02* 03 04 05* 50 51 52* 53 54
E	Setpoint program	Not fitted Fitted (adaptive tuning not active)	0 1

* Not available with setpoint program installed (E=1)

DIMENSIONS

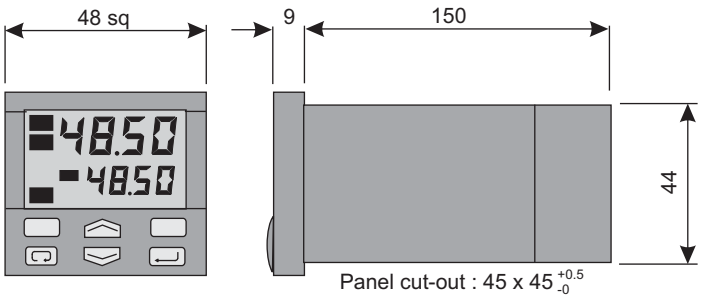

CONNECTION DIAGRAM

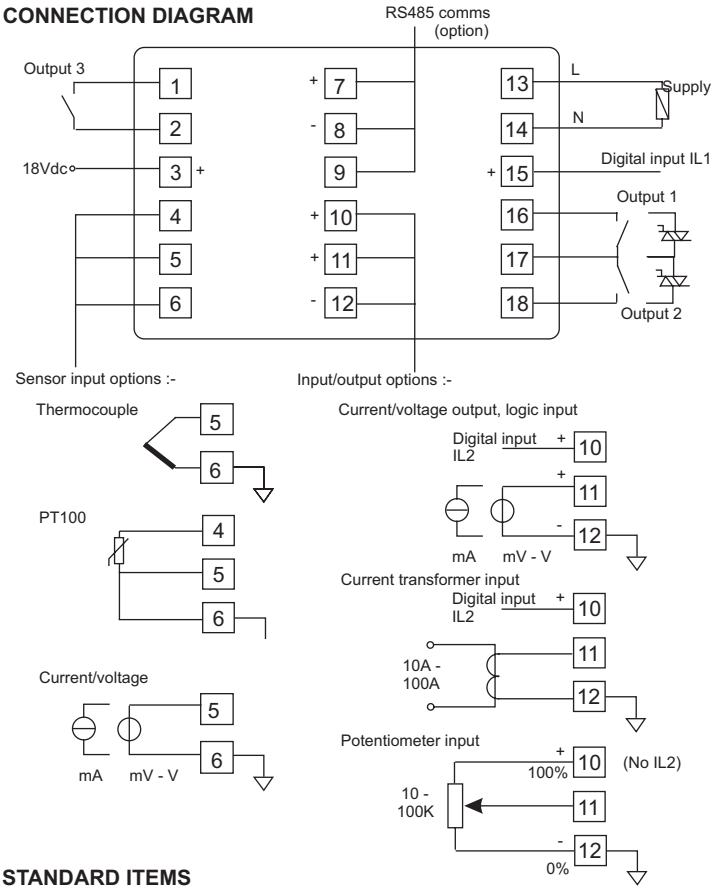

STANDARD ITEMS

Voltage	Output 1/2	Options	Part Number
100-240Vac	Relay/relay	None	M5-3100-0000
100-240Vac	Relay/relay	Setpoint programmer	M5-3100-1000
100-240Vac	Relay/relay	RS485, programmer	M5-3150-1000
24Vac/dc	Relay/relay	None	M5-5100-0000
24Vac/dc	Relay/relay	RS485 comms	M5-5150-0000

For suitable input sensors see page 26.

X1 1/8 DIN PID TEMPERATURE & PROCESS CONTROLLER



The X1 series microprocessor based PID controllers are a cost effective solution to heat-cool applications. The X1 has up to 2 PID control outputs, programmable alarm functions and optional serial communications, remote setpoint adjustment and ramp-dwell functions. The IP65 rated 1/8 DIN 96x48 case has a clear dual LED display showing the process value and setpoint as well as function indicators.

- Fuzzy autotune and adaptive algorithms
- Programmable alarm functions
- Wide range of thermocouple inputs
- IP65 front panel protection
- Analogue output
- Ramp and dwell functions
- Remote set point facility
- Dual 4 digit LED display
- Heater break detection
- Serial communications

SPECIFICATION

Power supply :	100 - 240Vac @ 50/60Hz, 24Vac @50/60Hz, 24Vdc	
Supply variation :	-15% +10% of supply voltage	
Input sensors :	B, E, J, K, L, N, R, T, S thermocouples, PT100, 0/4 to 20mA, 0/10 to 50mV	
Scale ranges :		
RTDs :	PT100	-99.9 to 300ºC
	PT100	-200 to 600ºC
Thermocouples :	B t/c	0 to 1800ºC
	E-L-J t/c	0 to 600ºC
	K t/c	0 to 1200ºC
	N t/c	0 to 1200ºC
	R t/c	0 to 1600ºC
	S t/c	0 to 1600ºC
	T t/c	-200 to 400 ºC
	T/c Ni-NiMo18%	0 to 1100ºC
	T/c W3%Re-W25%Re	0 to 2000ºC
	T/c W5%Re-W26%Re	0 to 2000ºC
Current:	0/4-20mA :	{ Configurable in engineering units
Voltage :	0/10 - 50mV :	{ mA, mV, V, bar, psi, rH, ph
Accuracy :	+/- 0.25% of scale range +/- 1 digit (RTD & t/c) +/- 0.1% of scale range (mA & mV)	
Operating modes :	1 PID or on/off loop with 2 or 3 alarms 2 PID or on/off heat-cool loops with 1or 2 alarms	
Output 1 :	SPST N.O. relay 2A/250Vac resistive or Triac 1A/250Vac resistive	
Output 2 :	SPST N.O. relay 2A/250Vac resistive or Triac 1A /250Vac resistive	
Output 3 :	SPDT N.O.Relay 2A/250Vac resistive	
Output 4 :	SSR drive 0-5Vdc +/-10%, 30mA max, non isolated	
Output 5 :	Analogue control output (optional)	
Serial interface :	RS485 isolated for Modbus/Jbus protocols	
Auxilliary supply :	24Vdc +/-20%, 30mA max for transmitter supply	
Approvals :	Conforms to CE standards EN50081-1 and EN50082-1 for emc and EN61010-1 for low voltage.	
Ambient temp :	0 to 50ºC non condensing	
Weight :	250gms	

DIMENSIONS

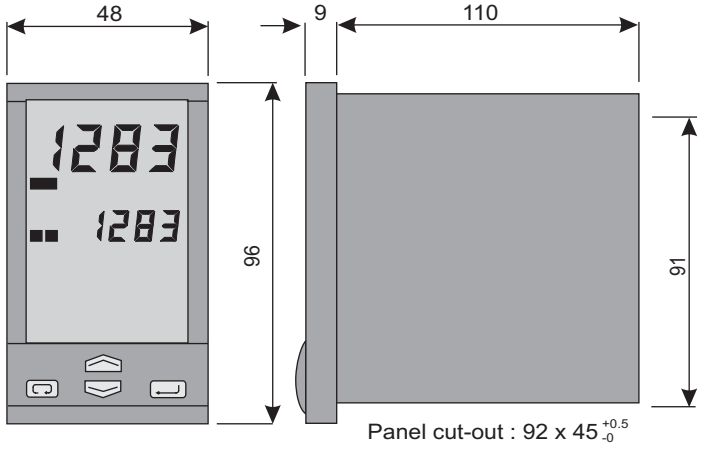

CONNECTION DIAGRAM

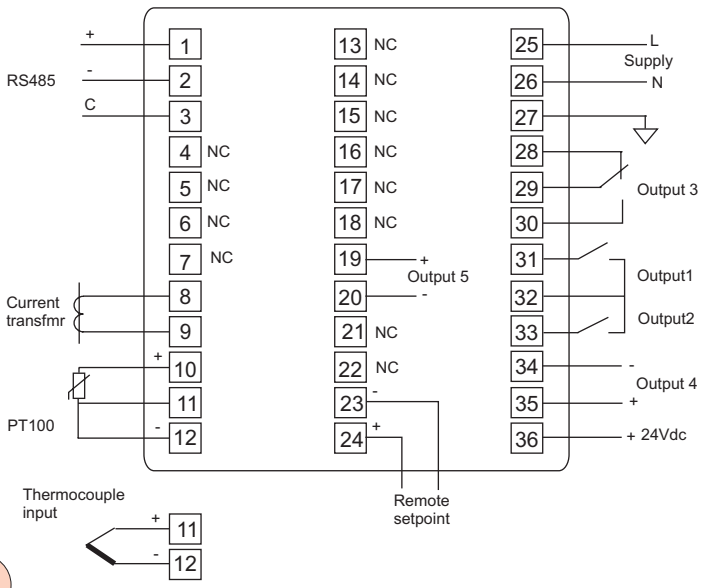

Part Numbering Options : X1 - A B C D - E 000

A	Power supply	100 - 240Vac 24Vac/dc	3 5
B	Output 1/ 2	Relay/Relay Triac/Triac	1 5
C	Serial comms	None RS485	0 5
D	Options	None Analogue output + remote setpoint	0 5
E	Special functions	None Start-up + timer functions	0 2

STANDARD ITEMS

Voltage	Output 1/2	Options	Part Number
100-240Vac	Relay/relay	None	X1-3100-0000
100-240Vac	Relay/relay	Start-up/timer	X1-3100-2000
100-240Vac	Relay/relay	RS485 comms	X1-3150-0000
24Vac/dc	Relay/relay	None	X1-5100-0000
24Vac/dc	Relay/relay	RS485 comms	X1-5150-0000

For suitable input sensors see page 26.

X3 1/8 DIN PID TEMPERATURE & PROCESS CONTROLLER



The X3 series microprocessor based PID controllers are a cost effective solution to double action valve control applications. The X3 has up to 2 PID control outputs, programmable alarm functions and optional serial communications, remote setpoint adjustment and ramp - dwell functions. The IP65 rated 1/8 DIN 96x48 case has a clear dual LED display showing the process value and setpoint as well as function indicators.

- Fuzzy autotune and adaptive algorithms
- Programmable alarm functions
- Wide range of thermocouple inputs
- IP65 front panel protection
- Analogue output with pot feedback
- Ramp and dwell functions
- Remote set point facility
- 3 Digital inputs
- Heater break detection
- Serial communications

SPECIFICATION

Power supply : 100 - 240Vac @ 50/60Hz, 24Vac @50/60Hz, 24Vdc
Supply variation : -15% +10% of supply voltage
Input sensors : B, E, J, K, L, N, R, T, S thermocouples, PT100, 0/4 to 20mA, 0/10 to 50mV
Scale ranges :

RTDs :	PT100	-99.9 to 300ºC
	PT100	-200 to 600ºC
Thermocouples :	B t/c	0 to 1800ºC
	E-L-J t/c	0 to 600ºC
	K t/c	0 to 1200ºC
	N t/c	0 to 1200ºC
	R t/c	0 to 1600ºC
	S t/c	0 to 1600ºC
	T t/c	-200 to 400 ºC
	T/c Ni-NiMo18%	0 to 1100ºC
	T/c W3%Re-W25%Re	0 to 2000ºC
	T/c W5%Re-W26%Re	0 to 2000ºC

Current : 0/4-20mA { Configurable in engineering units
Voltage : 0/10 - 50mV { mA, mV, V, bar, psi, rH, ph
Accuracy : +/- 0.25% of scale range +/- 1 digit (RTD & t/c)
+/- 0.1% of scale range (mA & mV)
Operating modes : 1 PID or on/off loop with 2 or 3 alarms
2 PID or on/off double action loops with 1 or 2 alarms
Output 1 : SPST N.O. relay 2A/250Vac resistive or Triac 1A/250Vac resistive
Output 2 : SPST N.O. relay 2A/250Vac resistive or Triac 1A /250Vac resistive
Output 3 : SPDT N.O.Relay 2A/250Vac resistive
Output 4 : SSR drive 0-5Vdc +/-10%, 30mA max, non isolated
Output 5 : Analogue control output (optional)

Serial interface : RS485 isolated for Modbus/Jbus protocols
Auxilliary supply : 24Vdc +/-20%, 30mA max for transmitter supply
Approvals : Conforms to CE standards EN50081-1 and EN50082-1 for emc and EN61010-1 for low voltage.
Ambient temp : 0 to 50ºC non condensing
Weight : 250gms

DIMENSIONS

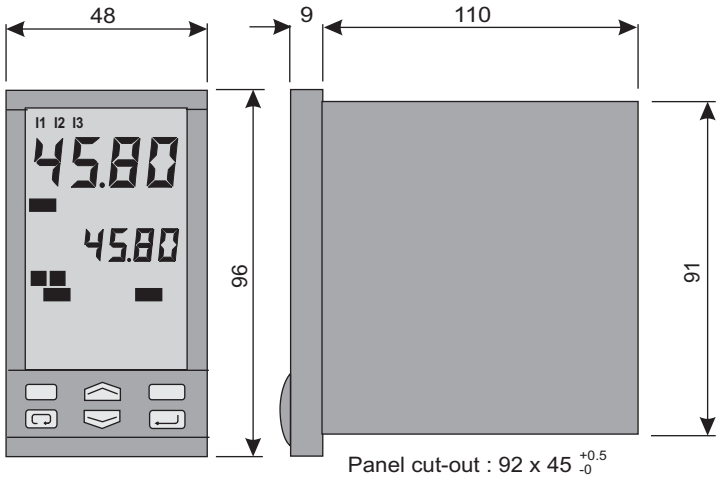

CONNECTION DIAGRAM

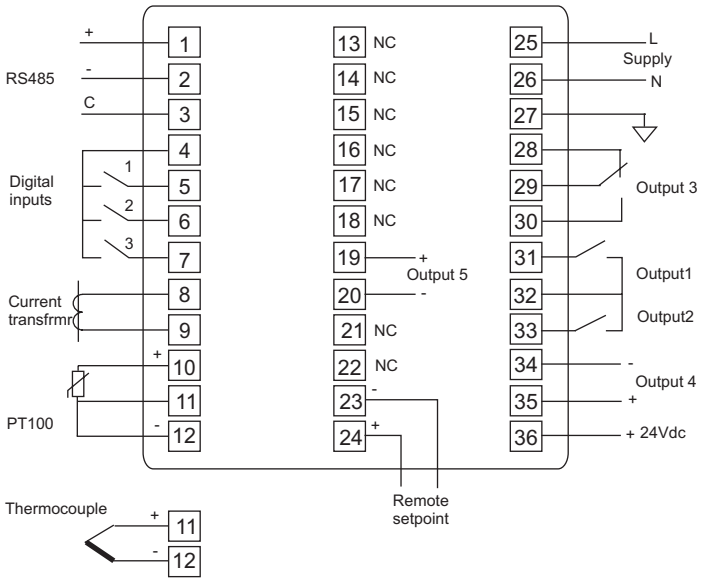

Part Numbering Options : X3 - A B C D - E 000

A	Power supply	100 - 240Vac 24Vac/dc	3 5
B	Output 1/ 2	Relay/Relay Triac/Triac	1 5
C	Serial comms	None RS485	0 5
D	Options	None Valve drive output Analogue output + remote setpoint	0 2 5
E	Special functions	None Start-up + timer functions 8 segment programmer	0 2 3

STANDARD ITEMS

Voltage	Output 1/2	Comms/options	Part Number
100-240Vac	Relay/relay	None	X3-3100-0000
100-240Vac	Relay/relay	Start-up/timer	X3-3100-2000
100-240Vac	Relay/relay	RS485 comms	X3-3150-0000
24Vac/dc	Relay/relay	None	X3-5100-0000
24Vac/dc	Relay/relay	RS485 comms	X3-5150-0000

For suitable input sensors see page 26.