E11047

Mounting clamp for position sensors

MOUNTING CLAMP M12

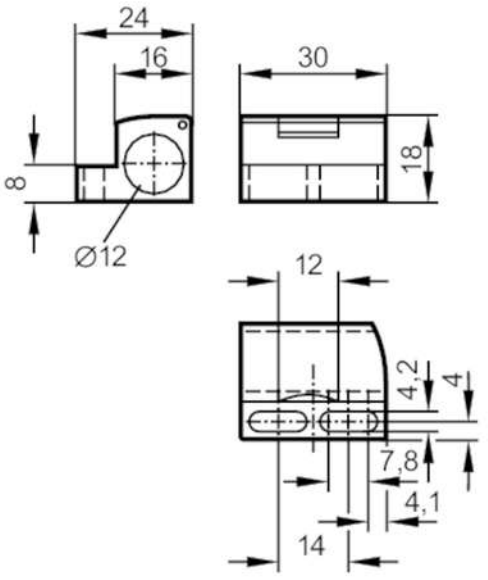

Application		
Design		with end stop
Operating conditions		
Ambient temperature	[°C]	-25...85
Mechanical data		
Weight	[g]	8
Dimensions	[mm]	18 x 30 x 24
Inside diameter	[mm]	12
Materials		PC
Remarks		
Pack quantity		1 pcs.