Product data sheet

Specifications



Electronic pressure sensors, Pressure sensors XM, XMLR 25 bar, G 1/4, 24 VDC, 4...20 mA, M12

XMLR025G0T25

Main

Range of product	OsiSense XM
Product or component type	Electronic pressure sensors
Pressure sensor type	Pressure transmitter
Pressure switch type of operation	Pressure transmitter
Device short name	XMLR
Pressure rating	25 bar 2495.90 kPa
Maximum permissible accidental pressure	9997.40 kPa 100 bar 10 MPa
Destruction pressure	9997.40 kPa 100 bar 10 MPa
Controlled fluid	Fresh water (0…80 °C) Air (-20…80 °C) Hydraulic oil (-20…80 °C) Refrigeration fluid (-20…80 °C)
Fluid connection type	G 1/4 (female) conforming to DIN 3852-Y
[Us] rated supply voltage	24 V DC SELV (voltage limits: 17…33 V)

Complementary

Current consumption	<= 50 mA
Electrical connection	Male connector M12, 4 pins
Analogue output function	4...20 mA
Type of output signal	Analogue
Analogue output function	4...20 mA
Scale type	Fixed differential
Materials in contact with fluid	Fluorocarbon FKM (Viton) Ceramic 316L stainless steel
Front material	Polyester
Housing material	316L stainless steel Polyacrylamide
Operating position	Any position, but disposals can falsified the measurement in case of upside down mounting
Protection type	Overvoltage protection

Disclaimer: This documentation is not intended as a substitute for and is not to be used for determining suitability or reliability of these products for specific user applications

	Reverse polarity Overload protection Short-circuit protection
Response time on output	<= 10 ms for analog output
Display type	4 digits 7 segments
Display response time type	Fast 50 ms Normal 200 ms Slow 600 ms
Maximum delay first up	300 ms
Overall accuracy	<= 1 % of the measuring range
Linearity error on analogue output	<= 0.5 % of the measuring range
Hysteresis on analogue output	<= 0.2 % of the measuring range
Measurement accuracy on switching output	<= 0.6 % of the measuring range
Repeat accuracy	<= 0.2 % of the measuring range
Drift of the sensitivity	+/- 0.03 % of measuring range/°C
Drift of the zero point	+/- 0.1 % of measuring range/°C
Display accuracy	<= 1 % of the measuring range
Mechanical durability	10000000 cycles
Depth	42 mm
Height	93 mm
Width	41 mm
Net weight	0.19 kg
[Uimp] rated impulse withstand voltage	0.5 kV DC
Electromagnetic compatibility	Susceptibility to electromagnetic fields: 10 V/m 80...2000 MHz conforming to EN/IEC 61000-4-3 Immunity to conducted RF disturbances: 10 V 0.15...80 MHz conforming to EN/IEC 61000-4-6 Surge immunity test: 1 kV conforming to EN/IEC 61000-4-5 Electrical fast transient/burst immunity test: 2 kV conforming to EN/IEC 61000-4-4 Electrostatic discharge immunity test: 8 kV air, 4 kV contact conforming to EN/IEC 61000-4-2

Environment

Marking	CE
Product certifications	cULus EAC
Standards	EN/IEC 61326-2-3 UL 61010-1
Ambient air temperature for operation	-20…80 °C
Ambient air temperature for storage	-40…80 °C
IP degree of protection	IP65 conforming to EN/IEC 60529 IP67 conforming to EN/IEC 60529
Vibration resistance	20 gn (f= 10…2000 Hz) conforming to EN/IEC 60068-2-6
Shock resistance	50 gn conforming to EN/IEC 60068-2-27

Packing Units

Unit Type of Package 1	PCE
Number of Units in Package 1	1
Package 1 Weight	181.0 g
Package 1 Height	6.5 cm

Package 1 width	7.5 cm
Package 1 Length	12.7 cm

Offer Sustainability

REACh Regulation	REACh Declaration
REACh free of SVHC	Yes
EU RoHS Directive	Pro-active compliance (Product out of EU RoHS legal scope) EU RoHS Declaration
Mercury free	Yes
RoHS exemption information	Yes
California proposition 65	WARNING: This product can expose you to chemicals including: Diisononyl phthalate (DINP), which is known to the State of California to cause cancer, and Di-isodecyl phthalate (DIDP), which is known to the State of California to cause birth defects or other reproductive harm. For more information go to www.P65Warnings.ca.gov

Dimensions

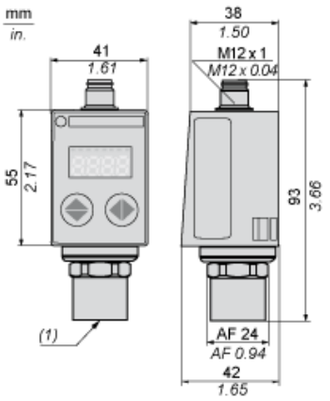

(1) Fluid entry: G 1/4 A female

Connections and Schema

Connector Wiring

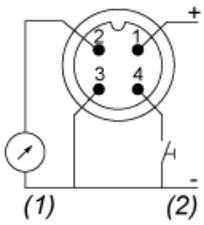

(1) I Out or V Out
(2) Test Input

Analogue Output Description

Analogue Output Signal

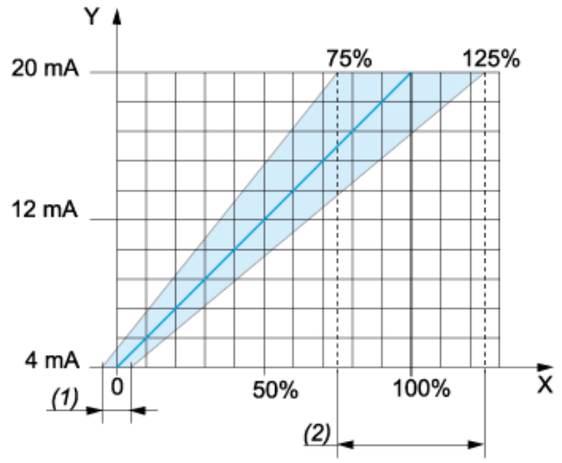

X : Pressure
Y : Analogue output signal
(1) An offset of +/-5% of nominal pressure can be compensated (with **Cof** Configuration menu. **Cof**: Offset Compensation)
(2) The analogue curve can be adjusted from -25% to +25% of nominal pressure (with **AEP** Configuration menu. **AEP**: analogue end point).