SKF CASM BLDC

Technical Document

Getting started and motor installation instruction

Release November 18, 2014
Revision V1.0 / PC

Contents

1 System Overview 2
1.1 Possible motor – CASM combinations 2
1.2 Dunker motor configuration 2
1.3 Needed components for operation 3
1.4 Operating modes 3
1.4.1 Operation with a PLC system 3
1.4.2 Repetitive, autonomous run 3
2 Wiring instruction 4
2.1 BG45 PI wiring instruction 4
2.2 BG65S PI wiring instruction 5
2.3 BG75 PI wiring instruction 7
3 General Overview 9
3.1 Simple Positioning Module 9
3.2 Standard Positioning Module 9
3.3 Advanced Positioning Module 9
3.4 Motion Profile Definition 9
3.5 First Steps 9
3.6 General Interface 10
3.7 Motion record option 11
4 Simple Positioning Module 12
4.1 Initialization 12
4.2 Controlling 12
4.3 Automatic modus 13
4.4 Getting started 13
5 Standard Positioning Module 14
5.1 Initialization 14
5.2 Controlling 14
5.3 Automatic modus 15
5.4 Getting started 15
6 Advanced Positioning Module 16
6.1 Initialization 16
6.2 Controlling 16
6.3 Automatic modus 17
6.4 Getting started 17

1 System Overview

CASM electric cylinders powered by brushless DC motors are ideally suited for fast and powerful movements. Replacement of pneumatic cylinders has never been easier. Just parameterize the cylinder by the SKF Drive Assistant software with a few steps and benefit from variable speed, high positioning accuracy, high force and long lifetime. The highly efficient electric cylinder will help to increase productivity by less energy consumption and therefore less CO2 emission. Due to the tremendous energy savings compared to pneumatic solutions, the investment cost will be paid back in a short time period.
After the parameterization, the DC powered cylinder can be operated independently by PLC or by switches. The motion controller is already built in.



Axial motor configuration



Parallel motor configuration

1.1 Possible motor – CASM combinations

SKF offers three different linear unit types called CASM combined with four different brushless DC motors. The motor can be attached, either in an axial or in a parallel configuration.

Linear unit	Dunker motors					
	BG45		BG65S		BG75	
	Axial	Parallel	Axial	Parallel	Axial	Parallel
CASM-32 (LS/BS/BN)	X	X				
CASM-40 (LS/BS/BN)			X	X	X	X
CASM-63 (LS/BN/BF)					X	X

1.2 Dunker motor configuration

The brushless DC motors offered from SKF contain the following elements:

1. Brushless DC motor
2. Encoder
3. Power of brake
4. On board positioning, current* and velocity* logic

* Part of the Dunkermotoren standard software

1.3 Needed components for operation

The needed components for a normal operation of the different actuator systems are given in the bellow table. A more detailed view on the motor wiring is given in chapter 2.

Combination	Actuator			Cable			Power supply		Programming cable
	Linear unit	Motor adapter	Motor	Power cable	Electronics cable	Ballast connector	Power supply	Electronics supply	
CASM-32 / BG45	X	X	X	X[†]		-	24V DC		X
CASM-40 / BG65S	X	X	X	X[†]		X	40V DC	24V DC	X
CASM-40 / BG75	X	X	X	X	X	X	40V DC	24V DC	X
CASM-63 / BG75	X	X	X	X	X	X	40V DC	24V DC	X

1.4 Operating modes

It is possible to operate the actuator in combination with a PLC module, control it by buttons or repetitive run it in an autonomous modus.

1.4.1 Operation with a PLC system

The logic and timing of the positions, stored inside of the motor, is done by the program of the PLC.



1.4.2 Repetitive, autonomous run

The actuator operates repetitively according a predefined sequence of selected positions. Therefore the timing between the positions is stored inside of the motor. Start and stop of the sequence can be controlled by a button or another constant input signal.



[†] Power and electronics cable is joined

2 Wiring instruction

Please refer to the wiring instruction manual for the brushless DC motors BG45 PI, BG65S PI and BG75 PI.

2.1 BG45 PI wiring instruction

Power supply electronic and signal interface.
Motor plug: Round plug to DIN 45326, Binder, Series 723. The 12-pin motor connector supplies power for the motor and a 24V supply for the control electronics.

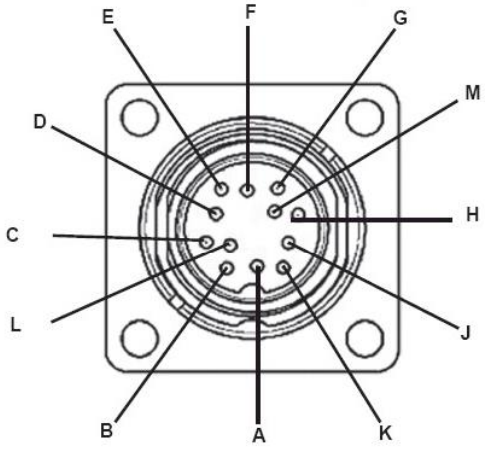

Plug- Pin	Connection	Lead colour in connection cable with 12-pin connector	
A	OUT1	orange	
B	IN0	yellow	
C	IN1	blue	
D	U_C + 24V DC	green	
E + F	U_E +12/ 24V DC	red	
G + M	GND	black	
H	IN4	violet	
J	IN3	pink	
K	OUT2	white	
L	IN2	brown	

Parameterization: Motor plug: Round plug M12

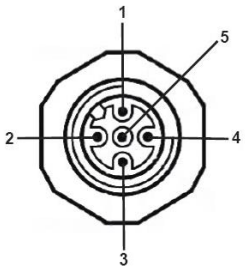

Connection electronic supply interface

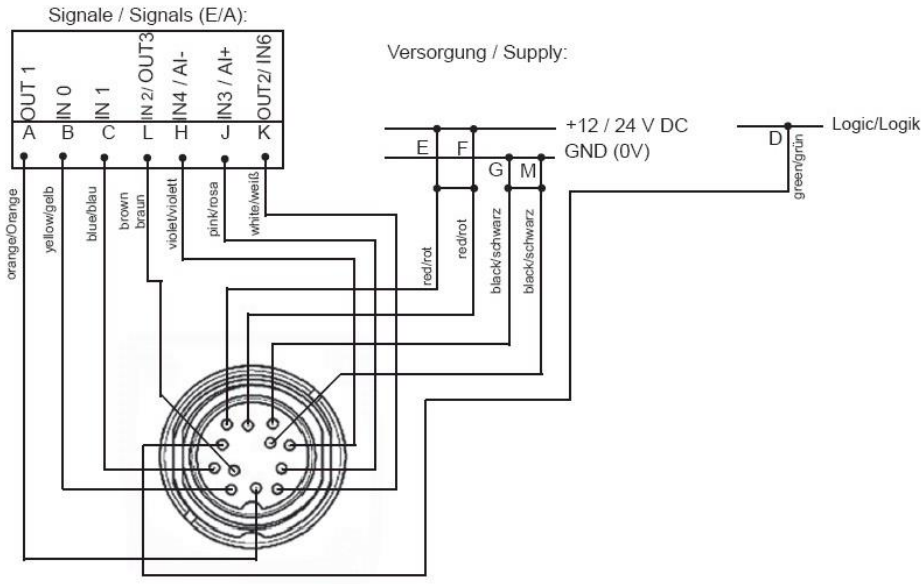

2.2 BG65S PI wiring instruction

Power supply electronic and signal interface

Connection via 15-pin connector for motor

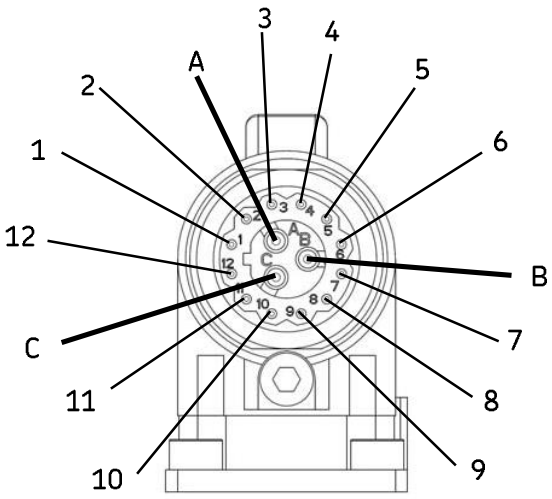

Plug- Pin	Connection	Lead colour in connection cable with 15-pin connector	
A	U	blue	
B	Ballast resistor	black	
C	GND	brown	
1	IN0	yellow	
2	IN1	blue	
3	IN2	brown	
4	IN3	green	
5	IN4	grey	
6	N.C.		
7	AI+	pink	
8	AI-	violet	
9	U	red	
10	OUT1	black	
11	OUT2	red/ blue	
12	OUT3	white	

Parameterization: Motor plug: Round plug M12

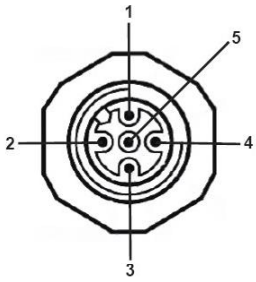

Connection electronic supply interface

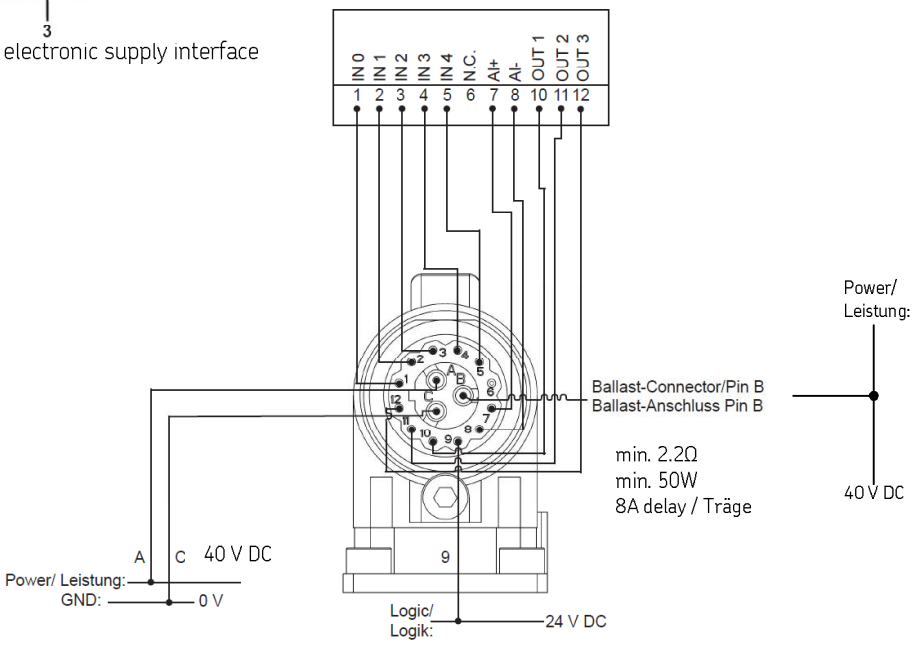

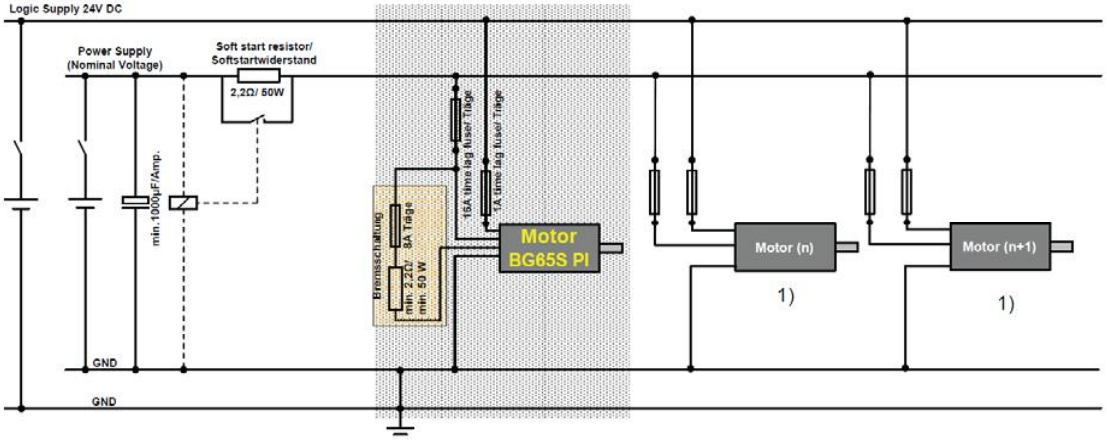

hi e er ti re th e t r with e wer t e t r Ω
t e i te r ted ter the wer h w i the e he t

2.3 BG75 PI wiring instruction

Power supply

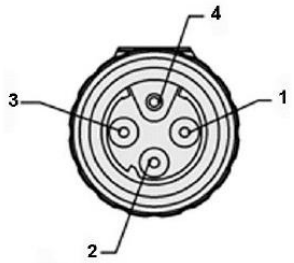

???- ?i?	????e?ti??	?e?d ????r i? ????e?ti?? ????e with ?-?i? ????e?t?r	
?	? ?? ?t?r ??wer?	????	1
?	??????t re?i?t?r	????	2
?	? ??? ????	????	3
?	??rth wire	?e??w ??ree?	

Connection motor power supply

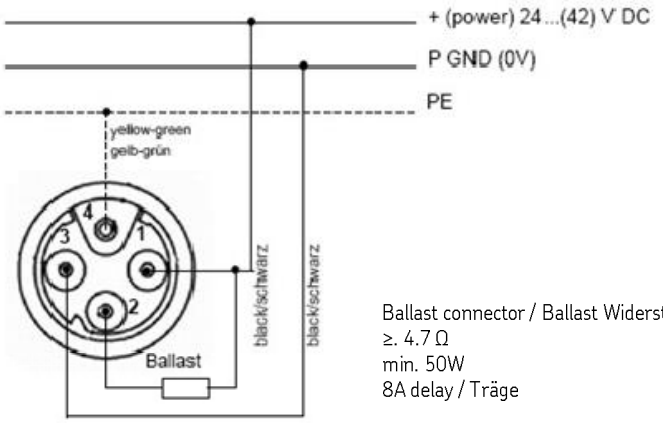

Ballast connector / Ballast Widerstand
≥. 4.7 Ω
min. 50W
8A delay / Träge

Power supply electronic and signal interface

Motor plug: Round plug to DIN 45326, Binder, Series 723. The 12-pin motor connector supplies power for the motor and a 24V supply for the control electronics.

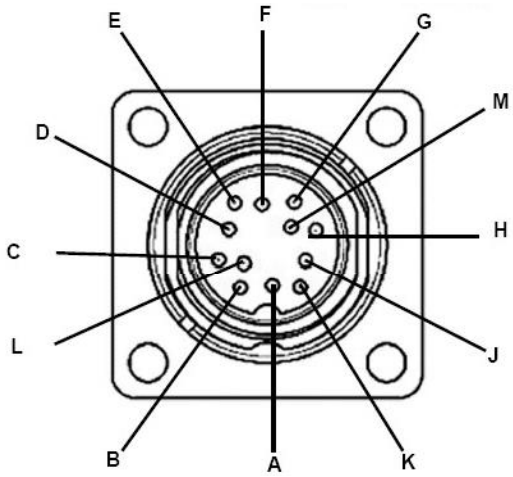

????- ?i?	????e?ti??	?e?d ????r i? ????e?ti?? ????e with ??-?i? ????e?t?r	
?	?? ?	?e??w	
?	?? ?	???e	
?	?? ?	?r?w?	
?	?? ?	?ree?	
?	????	?re?	
?	????	?re?-?i??	
?	?????	?i??	
?	???-?	?i??et	
?	?? ? ???? ??	red	
?	?? ? ?????????	??????	
?	?? ?	red-???e	
M	????	white	

Parameterization: Motor plug: Round plug M12

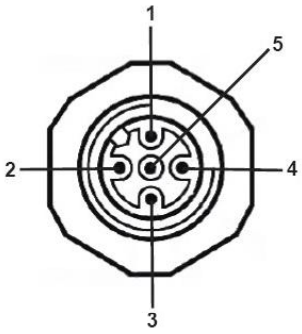

Connection electronic supply interface

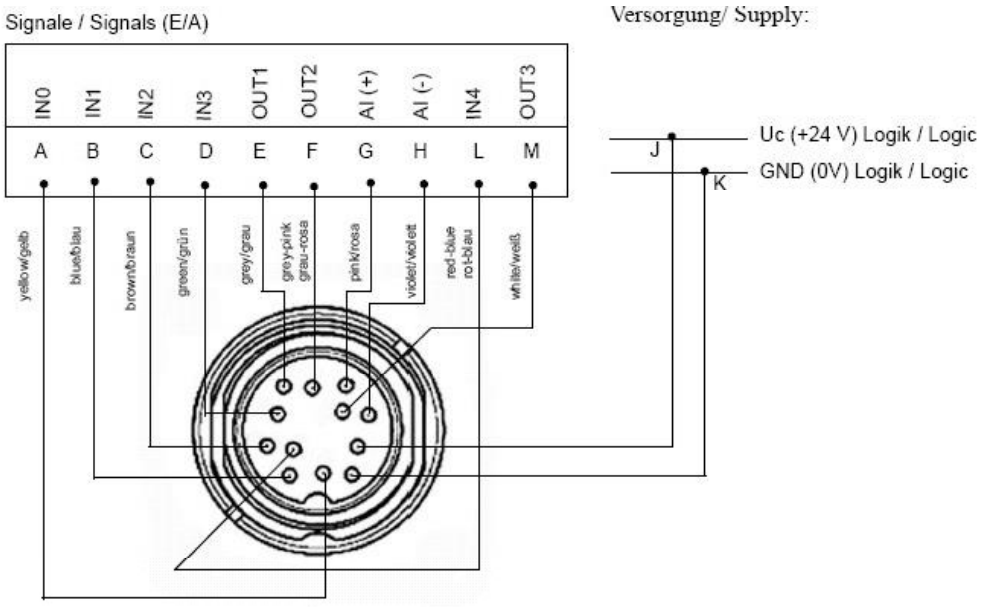

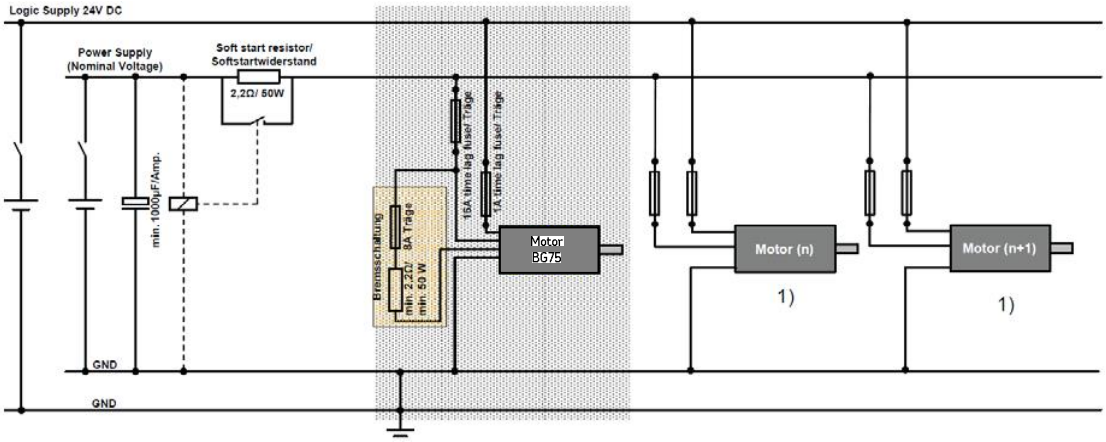

□ hi□e □□er□ti□□ □ □re th□□ □□e □ □t□r with □□e □□wer □□□□□□□□ □□□□□t □□□□e□t□r □□□Ω □□□□ □ □ □□t □e i□te□r□ted □□ter the □□wer □□□□□□ □□□h□w□ i□ the □□□□e □□he□ □t□□

3 General Overview

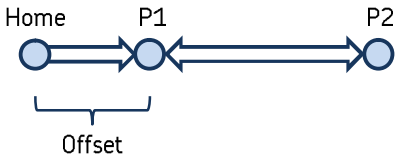

3.1 Simple Positioning Module

Drive between two positions (chapter 4)

One velocity and accelerations defined for all positions.

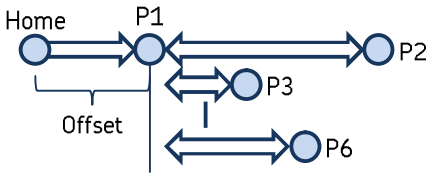

3.2 Standard Positioning Module

Define up to six positions (chapter 5)

One velocity and accelerations defined for all positions.

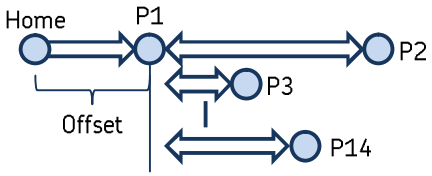

3.3 Advanced Positioning Module

Define up to 14 positions (chapter 6)

Individual velocity and accelerations defined each motion profile.

3.4 Motion Profile Definition

A motion profile is defined as following:

1. Position (stroke) in mm
2. Velocity in mm/s
3. Acceleration in mm/s^2
4. Deceleration in mm/s^2

The profile is shown on the right hand side. The numbers correspond to the above list.

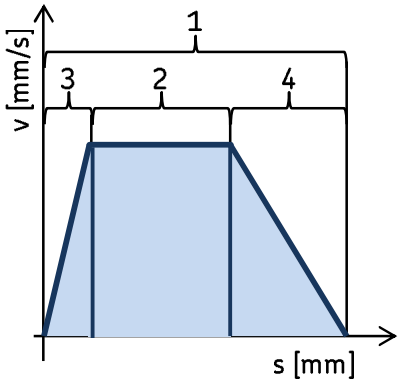

3.5 First Steps

1. Choose the positioning module who fits best to your application.
2. Activate the module of your choice by double-click the module name. If you only click once more information's about the module are shown.
3. Choose your motor – CASM combination in section **Device** or choose a previously defined setting in section **Selected.**
4. Define the driving direction in section **Direction of moving**. If you choose **Extracting** the home position will be at a retracted actuator position, if your choice is **Retracting** the home position is located at an extended actuator position.
5. Define the way to home the actuator in section **Home.**
6. Define the driving positions in section **Positions.** If your motor includes a break activate the section **Break management.**
7. Connect the motor by the programming cable and press **Load to Motor** in section **Selected.**
8. Perform a homing to find the zero position. Now the actuator is ready to use.

3.6 General Interface

1. Motor type and software information
2. Real time motor information
3. Real time I/O information
4. Error output
5. Connection node identification
6. Manual positioning mode
7. Specific module setting tab. Three modules available (simple, standard and advanced)
8. Drive parameter overview tab
9. Plot recording tab
10. Device information tab

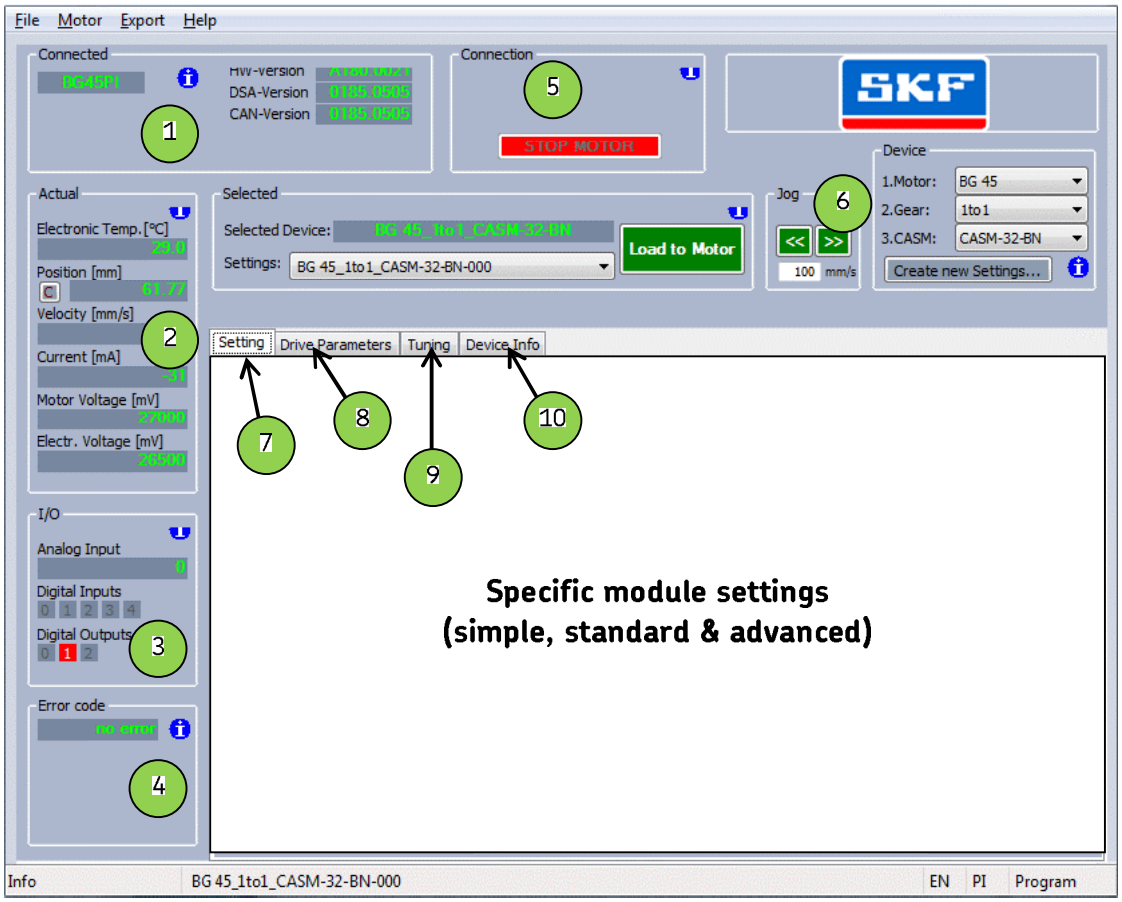

3.7 Motion record option

Select the Tuning tab to record the movement of the actuator.

1. Specify the time period for your record and define the documents name for your recorded data e.g. ▯▯▯M▯▯▯▯▯ .The document gets stored on your local drive in the active program module (e.g. for the Advanced module: ▯▯▯▯▯▯▯▯▯▯▯▯▯▯▯▯▯▯▯r▯▯e▯t▯▯▯d▯▯▯▯ed ▯▯▯ ▯r▯▯▯e▯▯▯e▯▯rd▯▯
2. Choose the parameters for recording on the right side by activating the check box
3. Start the recording by the button **Start**. During recording the interface gets frozen and all actual parameters are shown in yellow. After record the interface returns to normal behavior.
4. As result of the recording an additional window occurs with the recorded data. This picture can be saved by selecting the button **Save as PNG** and will be stored in the **Records** folder of the actual module.
5. For further processing the recorded ▯▯▯M▯▯▯▯▯ file can be opened in MS Excel.

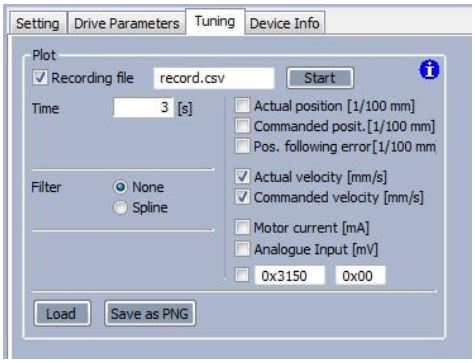

4 Simple Positioning Module

4.1 Initialization

BG motors sold by SKF are equipped by an incremental encoder. Therefore it is necessary to perform a reference drive (Homing) after motor reprogramming and power cut off. Standardized the motor is delivered by SKF with the function **Encoder** out of the **Position feedback** section (B).

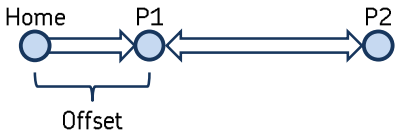

It is possible to emulate absolute encoder functionality by choosing the QAE function in the **Position feedback** section. With this function it is mandatory to keep the actuator position safely during reprogramming and power cut off periods.

Home is detectable by:

- Reference or limit switch
- Hard stop
- Actual position

Motor	Continues current [mA]	Peak current [mA]	Motor resolution [counts]
BG45x30PI 24V	5'000	20'000	1024
BG65Sx50PI 40V	10'000	24'000	4096
BG75x75PI 40V	20'800	48'000	4096

Before operation get sure that the allowable **peak-** and **continues-current** level is sufficient for your application (A). Please find the allowable current levels and the motor resolution for the different motor types in the table below.

4.2 Controlling

The motor is controlled by binary input signals. Therefore five inputs (IN) and two outputs (OUT) lines are available. The value 0 (zero) of a binary means not active (0 VDC), 1 means active (24 VDC).

- IN0: Reference or limit switch signal for homing
- IN1: Begin homing signal
- IN2 – IN3: Drive to position signal
- IN4: Motor enabling

OUT1	OUT2	Status
0	0	Motor disabled or Error or no Homing
1	0	Stopped, Ready, No Error, Homing done
0	1	Moving
1	1	Not used

IN0	Function
0	Limit switch OFF
1	Limit switch ON

IN1	IN2	IN3	Function
0	0	0	Clear error and STOP
1	0	0	Begin homing
0	1	0	Position 1
0	0	1	Position 2

IN4	Function
0	Motor movement disabled
1	Motor movement enabled

If the break management is activated, the status of the engaged or disengaged brake can be detected by output zero (OUT0).

OUT0	Status
0	Break is active (no voltage at break)
1	Break is not active (voltage at break)

4.3 Automatic modus

By activating the **Auto** column for more than one position (see point 5a in the bellow picture), the autonomous operating modus gets activated. In the autonomic modus the actuator will drive repeatedly between the different positions by considering the delay time after each step. The autonomous modus gets activated by a signal on the four input lines:

IN1	IN2	IN3	IN4	Function
0	0	0	0	Stop
1	1	1	1	Autonomous modus

4.4 Getting started

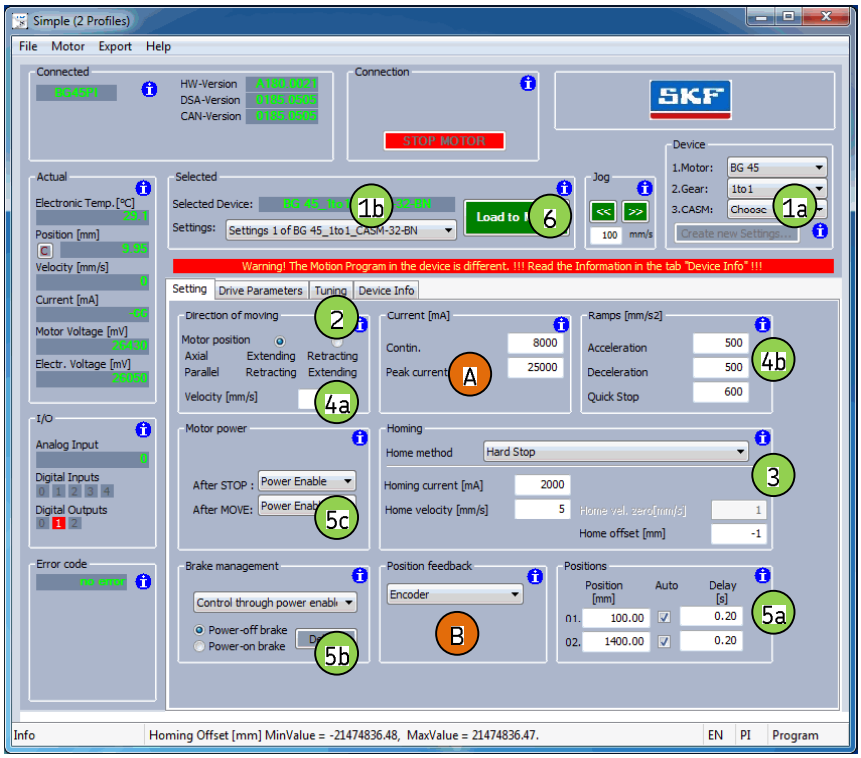

1. Choose your motor – CASM combination in section **Device** (1a) or choose a previously defined setting in section **Selected** (1b).
2. Define the driving direction in section **Direction of moving**. If you choose **Extracting** the home position will be at a retracted actuator position, if your choice is **Retracting** the home position is located at an extended actuator position.
3. Define the way to home the actuator in section **Home.**
4. Sett the driving **velocity** (4a) and the acceleration and deceleration **ramps** (4b).
5. Define the driving positions in section **Positions** (5a). If your motor includes a break activate the section **Break management** (5b). If the motor does not include a break choose the motor behavior after an emergency STOP or after a MOVE to a defined position (5c).
6. Connect the motor by the programming cable and press **Load to Motor** (6) in section **Selected.**
7. Perform a homing to find the zero position. Now the actuator is ready to use.

5 Standard Positioning Module

5.1 Initialization

BG motors sold by SKF are equipped by an incremental encoder. Therefore it is necessary to perform a reference drive (Homing) after motor reprogramming and power cut off. Standardized the motor is delivered by SKF with the function **Encoder** out of the **Position feedback** section (B).

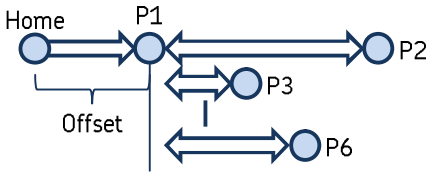

It is possible to emulate absolute encoder functionality by choosing the QAE function in the **Position feedback** section. With this function it is mandatory to keep the actuator position safely during reprogramming and power cut off periods.

Home is detectable by:

- Reference or limit switch
- Hard stop
- Actual position

Motor	Continues current [mA]	Peak current [mA]	Motor resolution [counts]
BG45x30PI 24V	5'000	20'000	1024
BG65Sx50PI 40V	10'000	24'000	4096
BG75x75PI 40V	20'800	48'000	4096

Before operation get sure that the allowable **peak-** and **continues-current** level is sufficient for your application (A). Please find the allowable current levels and the motor resolution for the different motor types in the table below.

5.2 Controlling

The motor is controlled by binary input signals. Therefore five inputs (IN) and two outputs (OUT) lines are available. The value 0 (zero) of a binary means not active (0 VDC), 1 means active (24 VDC).

- IN0: Reference or limit switch signal for homing
- IN1: Begin homing signal
- IN2 – IN3: Drive to position signal
- IN4: Motor enabling

IN0	Function
0	Limit switch OFF
1	Limit switch ON

IN1	IN2	IN3	Function
0	0	0	Clear error and STOP
1	0	0	Begin homing
0	1	0	Position 1
1	1	0	Position 2
0	0	1	Position 3
1	0	1	Position 4
0	1	1	Position 5
1	1	1	Position 6

IN4	Function
0	Motor movement disabled
1	Motor movement enabled

OUT1	OUT2	Status
0	0	Motor disabled or Error or no Homing
1	0	Stopped, Ready, No Error, Homing done
0	1	Moving
1	1	Not used

If the break management is activated, the status of the engaged or disengaged brake can be detected by output zero (OUT0).

OUT0	Status
0	Break is active (no voltage at break)
1	Break is not active (voltage at break)

5.3 Automatic modus

By activating the **Auto** column for more than one position (see point 5a in the bellow picture), the autonomous operating modus gets activated. In the autonomic modus the actuator will drive repeatedly between the different positions by considering the delay time after each step. The autonomous modus gets activated by a signal on the four input lines:

IN1	IN2	IN3	IN4	Function
0	0	0	0	Stop
1	1	1	1	Autonomous modus

5.4 Getting started



1. Choose your motor – CASM combination in section **Device** (1a) or choose a previously defined setting in section **Selected** (1b).
2. Define the driving direction in section **Direction of moving**. If you choose **Extracting** the home position will be at a retracted actuator position, if your choice is **Retracting** the home position is located at an extended actuator position.
3. Define the way to home the actuator in section **Home.**
4. Sett the driving **velocity** (4a) and the acceleration and deceleration **ramps** (4b).
5. Define the driving positions in section **Positions** (5a). If your motor includes a break activate the section **Break management** (5b). If the motor does not include a break choose the motor behavior after an emergency STOP or after a MOVE to a defined position (5c).
6. Connect the motor by the programming cable and press **Load to Motor** (6) in section **Selected.**
7. Perform a homing to find the zero position. Now the actuator is ready to use.

6 Advanced Positioning Module

6.1 Initialization

BG motors sold by SKF are equipped by an incremental encoder. Therefore it is necessary to perform a reference drive (Homing) after motor reprogramming and power cut off. Standardized the motor is delivered by SKF with the function **Encoder** out of the **Position feedback** section (B).

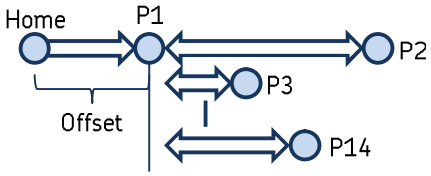

It is possible to emulate absolute encoder functionality by choosing the QAE function in the **Position feedback** section. With this function it is mandatory to keep the actuator position safely during reprogramming and power cut off periods.

Home is detectable by:

- Reference or limit switch
- Hard stop
- Actual position

Motor	Continues current [mA]	Peak current [mA]	Motor resolution [counts]
BG45x30PI 24V	5'000	20'000	1024
BG65Sx50PI 40V	10'000	24'000	4096
BG75x75PI 40V	20'800	48'000	4096

Before operation get sure that the allowable **peak-** and **continues-current** level is sufficient for your application (A). Please find the allowable current levels and the motor resolution for the different motor types in the table below.

6.2 Controlling

The motor is controlled by binary input signals. Therefore five inputs (IN) and two outputs (OUT) lines are available. The value 0 (zero) of a binary means not active (0 VDC), 1 means active (24 VDC).

- IN0: Reference or limit switch signal for homing
- IN1: Begin homing signal
- IN2 – IN4: Drive to position signal

OUT1	OUT2	Status
0	0	Error
1	0	Stopped, Ready, no Error
0	1	No Homing, no Error
1	1	Moving, no Error

If the break management is activated, the status of the engaged or disengaged brake can be detected by output zero (OUT0).

OUT0	Status
0	Break is active (no voltage at break)
1	Break is not active (voltage at break)

IN0	Function
0	Limit switch OFF
1	Limit switch ON

IN1	IN2	IN3	IN4	Function
0	0	0	0	Clear error and STOP
1	0	0	0	Begin homing
0	1	0	0	Position 1
1	1	0	0	Position 2
0	0	1	0	Position 3
1	0	1	0	Position 4
0	1	1	0	Position 5
1	1	1	0	Position 6
0	0	0	1	Position 7
1	0	0	1	Position 8
0	1	0	1	Position 9
1	1	0	1	Position 10
0	0	1	1	Position 11
1	0	1	1	Position 12
0	1	1	1	Position 13
1	1	1	1	Position 14 or Autonomous modus

6.3 Automatic modus

By activating the **Auto** column for more than one position (see point 5a in the bellow picture), the autonomous operating modus gets activated. In the autonomic modus the actuator will drive repeatedly between the different positions by considering the delay time after each step. The autonomous modus gets activated by a signal on the four input lines:

IN1	IN2	IN3	IN4	Function
0	0	0	0	Stop
1	1	1	1	Autonomous modus

6.4 Getting started



1. Choose your motor – CASM combination in section **Device** (1a) or choose a previously defined setting in section **Selected** (1b).
2. Define the driving direction in section **Direction of moving**. If you choose **Extracting** the home position will be at a retracted actuator position, if your choice is **Retracting** the home position is located at an extended actuator position.
3. Define the way to home the actuator in section **Home.**
4. Define the deceleration ramp in case of an emergency stop
5. Define the driving positions and the corresponding motion profile in section **Positions** (5a). If your motor includes a break activate the section **Break management** (5b). If the motor does not include a break choose the motor behavior after an emergency STOP or after a MOVE to a defined position (5c).
6. Connect the motor by the programming cable and press **Load to Motor** (6) in section **Selected.**
7. Perform a homing to find the zero position. Now the actuator is ready to use.