B4044707

Bottom part M flat, version I

Assembly unit: unique variety of applications - mobile / desk-top and wall mounted. With screw pillars for PCB fixing. End piece for bottom part required - depending on the application - battery compartment and lid / bottom panel with handle recess / bottom panel with snap-in strips, base (desk-top), base (station for mobile cases) or base (desk-top/wall) can be assembled - see separate articles.

Version
Suitable for mounting cover or aluminium front panel (sep. article)

Supply
1 bottom part flat



TECHNICAL DATA

Material	ABS (UL 94 HB)
Protection class	IP 54 opt. Sealings (accessories) as well as system components to complete required
Colour	off-white RAL 9002
Standards	RoHS compliant, REACH compliant

The degree(s) of protection listed refer to the empty standard enclosures (without any modifications) and are in compliance with the EN 60529 standard.

Width	225 mm
Depth	165 mm
Height	25.5 mm

Please take the dimensions from current parts. These are subject to material- and manufacturing-specific tolerances.

B4044707

Bottom part M flat, version I

PURCHASING DATA

Weight/1 part	160 g
Customs tariff number (OKW product)	39269097
Country of manufacture	Germany

CUSTOMISING OPTIONS

What else do you need to create your own personal product? We can supply our enclosures and tuning knobs fully modified to suit your electronic components and design requirements. Please advise for anything else we can do for you.

Customising options for B4044707


Machining


Lacquering



Printing



Laser marking


Special material


EMC shielding


Installation / Assembly of accessories

B4044707

Bottom part M flat, version I

MOBILE WITH BATTERY COMPARTMENT



Minimum components (for single parts)
1 bottom part, vers. I.
1 front design (cover or front panel Al).
1 battery compartment and lid. or 1 bottom part, vers. II.
1 front design (front panel ABS or glass panel).
1 battery compartment and lid.

SYSTEM COMPONENTS TO COMPLETE



B4044407
Cover M
ABS (UL 94 HB)
off-white RAL 9002
225x165x14mm



B4144047
Battery compartment and lid M, 5 x AA
ABS (UL 94 HB)
off-white RAL 9002



B4144106
Front panel M
Aluminium
matt anodised
221.5x161.5x2mm

ACCESSORY "PROTECTION"

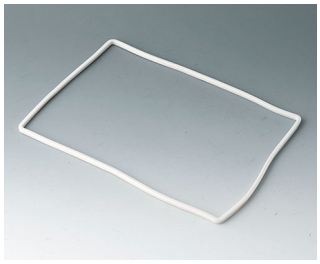

B4144005
Sealing M (bottom part - front design)
SEBS (TPE)

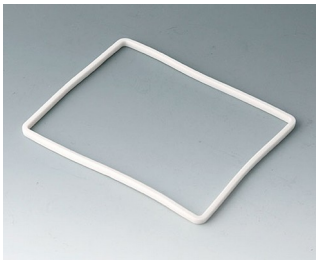

B4144006
Sealing M (bottom part - base/bot. panel/bat. comp...)
SEBS (TPE)

ACCESSORY

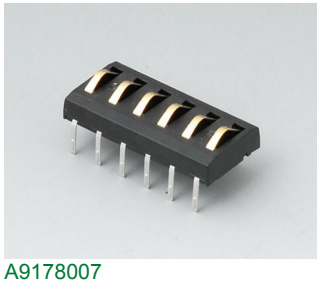

A9178007
Contacts, male
gold-plated

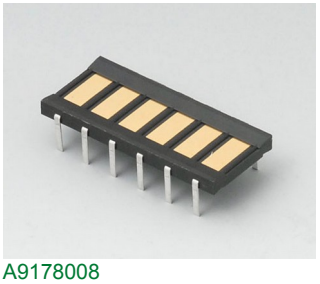

A9178008
Contacts, female
gold-plated

B4044707

Bottom part M flat, version I

MOBILE WITHOUT BATTERY COMPARTMENT



Minimum components (for single parts)
1 bottom part, vers. I.
1 front design (cover or front panel Al).
1 bottom panel with handle recess. or 1 bottom part, vers. II.
1 front design (front panel ABS or glass panel).
1 bottom panel with handle recess.

SYSTEM COMPONENTS TO COMPLETE



B4044407
Cover M
ABS (UL 94 HB)
off-white RAL 9002
225x165x14mm



B4144106
Front panel M
Aluminium
matt anodised
221.5x161.5x2mm



B4144167
Bottom panel with handle recess M
ABS (UL 94 HB)
off-white RAL 9002

ACCESSORY "PROTECTION"

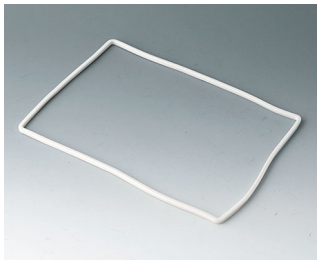

B4144005
Sealing M (bottom part - front design)
SEBS (TPE)

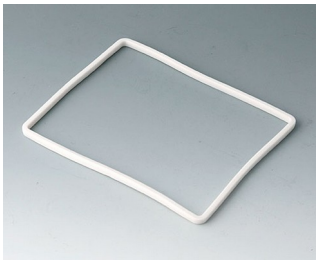

B4144006
Sealing M (bottom part - base/bot. panel/bat. comp...)
SEBS (TPE)

ACCESSORY

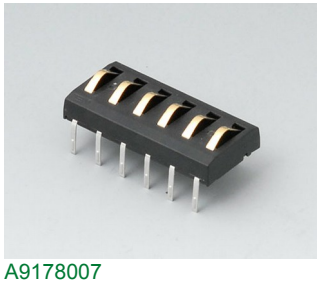

A9178007
Contacts, male
gold-plated

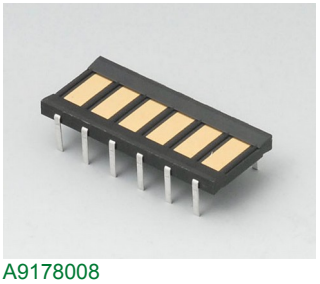

A9178008
Contacts, female
gold-plated

B4044707

Bottom part M flat, version I

MOBILE WITH STATION



Minimum components (for single parts)
1 bottom part, vers. I.
1 front design (cover or front panel Al).
1 battery compartment and lid or bottom panel with recess.
1 base – station for mobile case – or 1 bottom part, vers. II.
1 front design (front panel ABS or glass panel).
1 battery compartment and lid or bottom panel with handle recess.
1 base – station for mobile case –

SYSTEM COMPONENTS TO COMPLETE



B4044407
Cover M
ABS (UL 94 HB)
off-white RAL 9002
225x165x14mm



B4044837
Base M - charging station, case deposit mobile
ABS (UL 94 HB)
off-white RAL 9002
153x153x70mm



B4144047
Battery compartment and lid M, 5 x AA
ABS (UL 94 HB)
off-white RAL 9002



B4144106
Front panel M
Aluminium
matt anodised
221.5x161.5x2mm



B4144167
Bottom panel with handle recess M
ABS (UL 94 HB)
off-white RAL 9002

ACCESSORY "PROTECTION"



B4144005
Sealing M (bottom part - front design)
SEBS (TPE)



B4144006
Sealing M (bottom part - base/bot. panel/bat. comp...)
SEBS (TPE)

B4044707

Bottom part M flat, version I

ACCESSORY

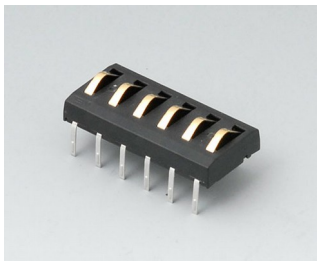

A9178007
Contacts, male
gold-plated

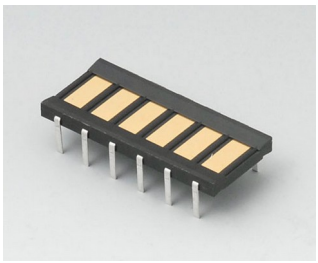

A9178008
Contacts, female
gold-plated

B4044707

Bottom part M flat, version I

MOBILE / WALL



Minimum components
1 bottom part, vers. I.
1 front design (cover or front panel Al).
1 battery compartment and lid or 1 bottom panel with handle recess.
1 wall suspension element. or 1 bottom part, vers. II.
1 front design (front panel ABS or glass panel).
1 battery compartment and lid or 1 bottom panel with handle recess.
1 wall suspension element.

SYSTEM COMPONENTS TO COMPLETE



B4044407
Cover M
ABS (UL 94 HB)
off-white RAL 9002
225x165x14mm



B4144047
Battery compartment and lid M, 5 x AA
ABS (UL 94 HB)
off-white RAL 9002



B4144106
Front panel M
Aluminium
matt anodised
221.5x161.5x2mm



B4144167
Bottom panel with handle recess M
ABS (UL 94 HB)
off-white RAL 9002



B4144247
Wall suspension element M
ABS (UL 94 HB)
off-white RAL 9002

ACCESSORY "PROTECTION"



B4144005
Sealing M (bottom part - front design)
SEBS (TPE)



B4144006
Sealing M (bottom part - base/bot. panel/bat. comp...)
SEBS (TPE)

B4044707

Bottom part M flat, version I

ACCESSORY

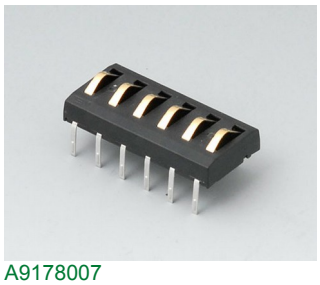

A9178007
Contacts, male
gold-plated

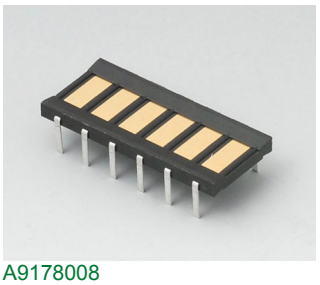

A9178008
Contacts, female
gold-plated

B4044707

Bottom part M flat, version I

DESK-TOP (SCREW-TYPE CONNECTION)



Minimum components (for single parts)
1 bottom part, vers. I.
1 front design (cover or front panel Al).
1 base – desk-top – or 1 bottom part, vers. II.
1 front design (front panel ABS or glass panel).
1 base – desk-top –

SYSTEM COMPONENTS TO COMPLETE



B4044407
Cover M
ABS (UL 94 HB)
off-white RAL 9002
225x165x14mm



B4044827
Base M - desk-top -
ABS (UL 94 HB)
off-white RAL 9002
153x153x63mm



B4144106
Front panel M
Aluminium
matt anodised
221.5x161.5x2mm

ACCESSORY "PROTECTION"

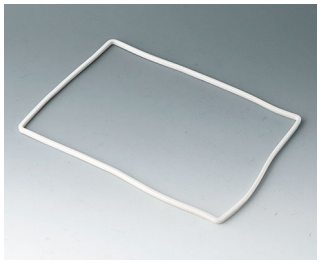

B4144005
Sealing M (bottom part - front design)
SEBS (TPE)

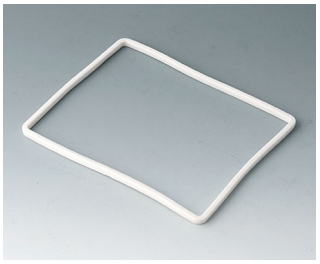

B4144006
Sealing M (bottom part - base/bot. panel/bat. comp...)
SEBS (TPE)

B4044707

Bottom part M flat, version I

DESK-TOP / WALL



Minimum components (for single parts)
1 bottom part, vers. I.
1 front design (cover or front panel Al).
1 bottom panel with snap-in strips.
1 base – desk-top/wall – or 1 bottom part, vers. II.
1 front design (front panel ABS or glass panel).
1 bottom panel with snap-in strips.
1 base – desk-top/wall –

SYSTEM COMPONENTS TO COMPLETE



B4044407
Cover M
ABS (UL 94 HB)
off-white RAL 9002
225x165x14mm

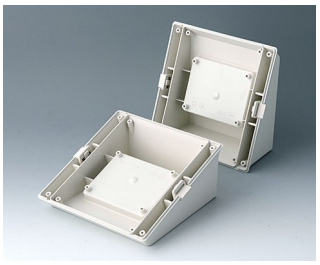

B4044847
Base M - desk-top/wall -
ABS (UL 94 HB)
off-white RAL 9002
153x153x63mm



B4144106
Front panel M
Aluminium
matt anodised
221.5x161.5x2mm

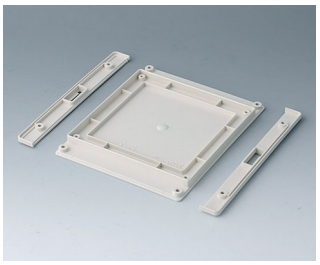

B4144257
Bottom panel with snap-in strips M
ABS (UL 94 HB)
off-white RAL 9002

ACCESSORY "PROTECTION"



B4144005
Sealing M (bottom part - front design)
SEBS (TPE)



B4144006
Sealing M (bottom part - base/bot. panel/bat. comp...)
SEBS (TPE)

B4044707

Bottom part M flat, version I

INSTALLATION



Minimum components
1 bottom part, vers. I.
1 front design (cover).
1 bottom panel.
1 installation assembly kit. or 1 bottom part, vers. II.
1 front design (front panel ABS or glass panel).
1 bottom panel.
1 installation assembly kit.

SYSTEM COMPONENTS TO COMPLETE



B4044407
Cover M
ABS (UL 94 HB)
off-white RAL 9002
225x165x14mm



B4144106
Front panel M
Aluminium
matt anodised
221.5x161.5x2mm

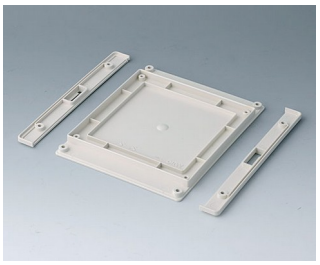

B4144257
Bottom panel with snap-in strips M
ABS (UL 94 HB)
off-white RAL 9002

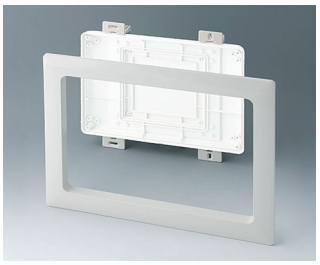

B4144587
Installation assembly kit M, flat
ABS (UL 94 HB)
off-white RAL 9002
272x218mm

ACCESSORY "PROTECTION"



B4144005
Sealing M (bottom part - front design)
SEBS (TPE)



B4144006
Sealing M (bottom part - base/bot. panel/bat. comp...)
SEBS (TPE)

Subject to technical modification without notice. © by OKW Gehäusesysteme, Buchen/Germany.

Unterteil flach Ausf. I
Innenansicht

Bottom part flat, vers. I
inside view

B 40 44 707

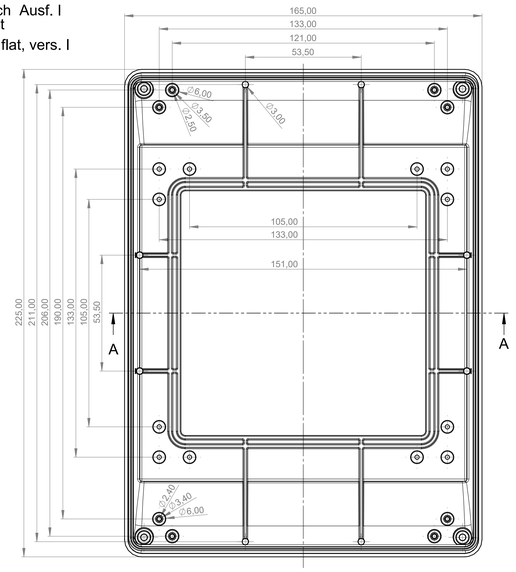

Oberteil
Aussenansicht

B 40 44 407

Cover
outside view

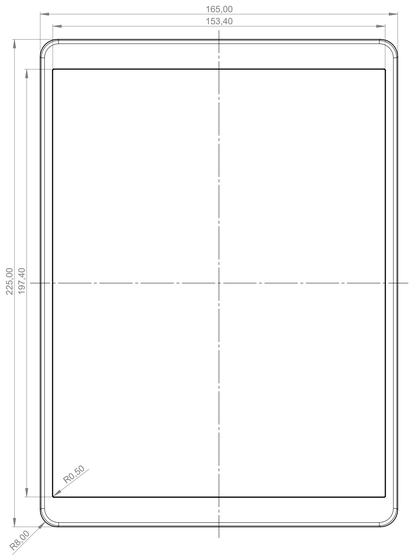

Oberteil
Innenansicht

Cover
inside view

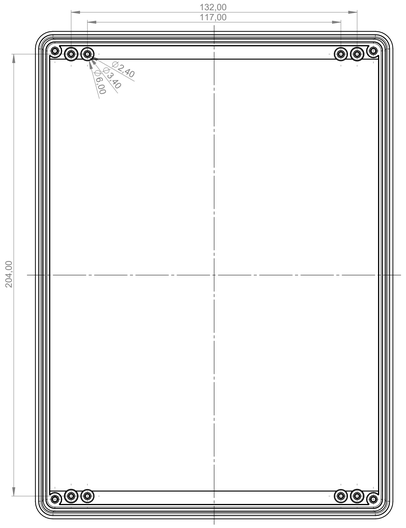

Frontplatte Al
Front panel Al

B 41 44 106

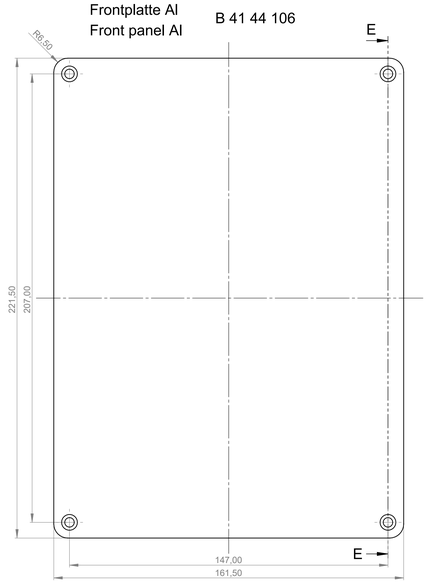

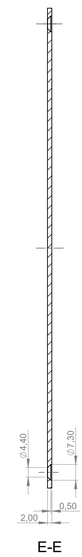

Batteriefach
Battery compartment

B 41 44 047

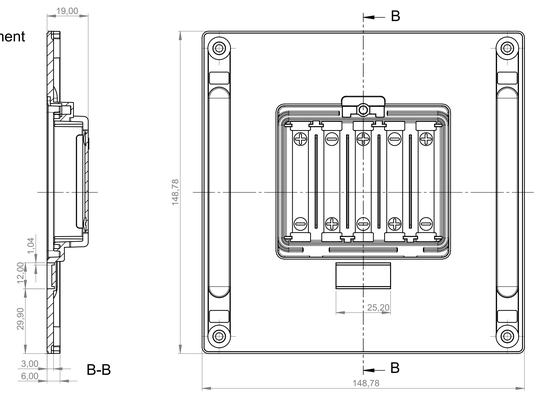

Bodenplatte mit Griffmulde
Bottom panel
with handle recess

B 41 44 167

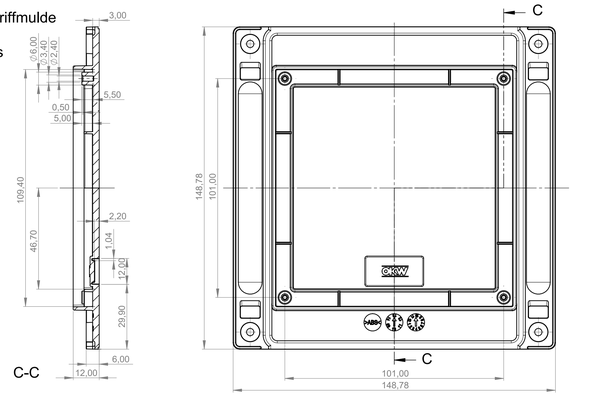

Bodenplatte mit Rastleiste
Bottom panel with snap-in strips

B 41 44 257

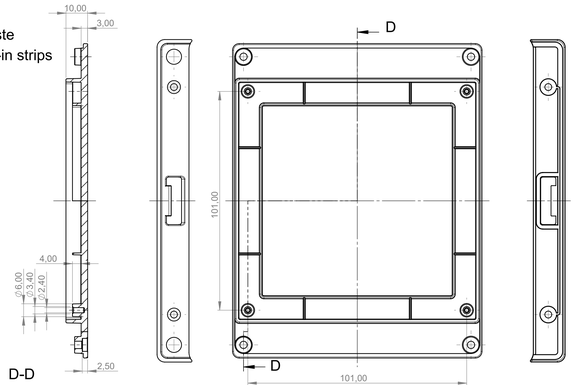

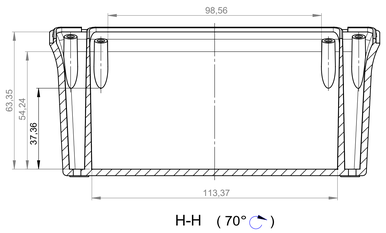

H-H (70°)

Sockel
Base

B 40 44 8*7

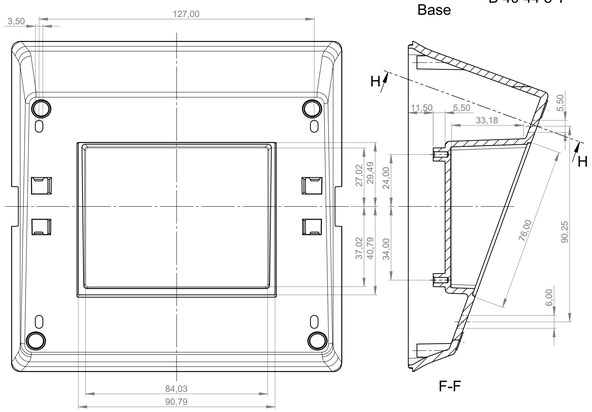

F-F

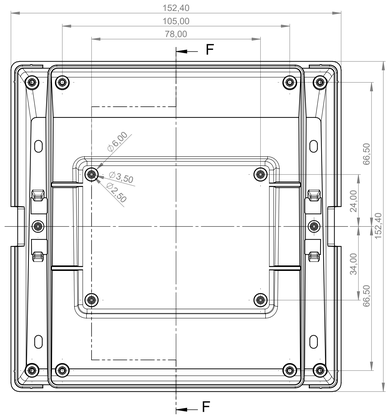

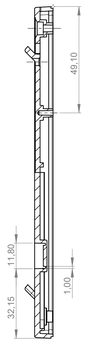

G-G

Sockeldeckel
Base cover

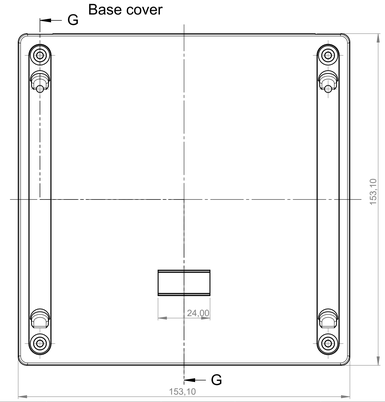

Platine Oberteil
PCB cover

Folientastatur
Membrane keyboard

Bitte die Maße an aktuellen Teilen abnehmen.
Diese unterliegen material- und produktionsspezifischen Fertigungstoleranzen.

Please take the dimensions from current parts.
These are subject to material- and manufacturing-specific tolerances.

Informationskopie
wird nicht aktualisiert
Copy for Information
will not be updated

Technische Änderungen vorbehalten. Irrtümer oder Druckfehler begründen keinen Anspruch auf Schadenersatz. Richtige Einbaumaße bitte direkt mit dem aktuellen Produkt abstimmen.

Subject to technical modification without prior notice. Typographical and other errors do not justify any claim for damages. All dimensions must be checked directly on the current product.

Sous réserve de modifications techniques. Toute erreur ou faute d'impression ne justifie aucune demande d'indemnisation. Nous prions les clients de vérifier les dimensions des composants avant les boîtiers avant le montage.

Erst. am:	17.11.2009	Toleranzen:	Status:
Erst. von:	Hasselb.	DIN 16901 T130	SERIENFREIGABE
Freig. am:	24.09.2013	Volumen:	Zeichnungsart:
Freig. von:	D. Hasselbach		KUNDE
Revision:	02		

DIN 6 Teil 2

This document contains proprietary information of OKW Gehäusesysteme GmbH and is tendered subject to the conditions that the information be retained in confidence not be reproduced or copied and not be used or incorporated in any product.

OKW GEHÄUSE SYSTEME

INTERFACE-TERMINAL M
Vers. I flat, cover, front panel Al

B4044***

M 1:1

Für dieses Dokument behalten wir uns alle Urheberrechte vor. Es darf auch auszugsweise weder vervielfältigt noch Dritten in irgendeiner Form zugänglich gemacht werden.

Datenname: 00011927

Unterteil flach, Ausf. I
Bottom part flat, vers. I

Oberteil, Batteriefach, Sockel
Cover, battery compartment, base

A-A

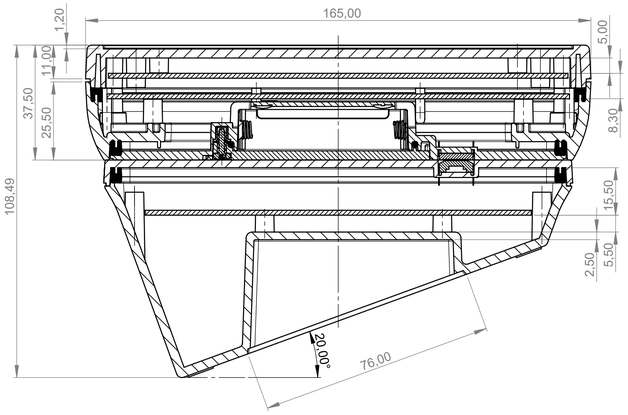

Oberteil, Bodenplatte mit Rastleisten, Sockel
Cover, bottom panel with snap-in strips, base

A-A

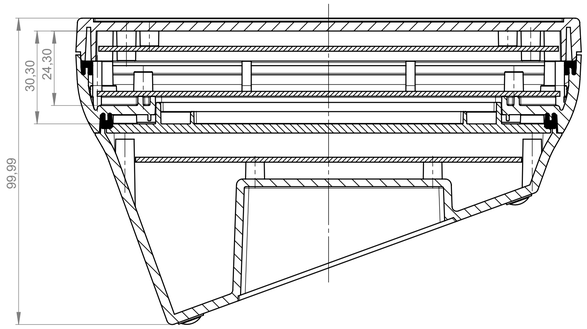

Frontplatte Al, Batteriefach, Sockel
Front panel Al, battery compartment, base

A-A

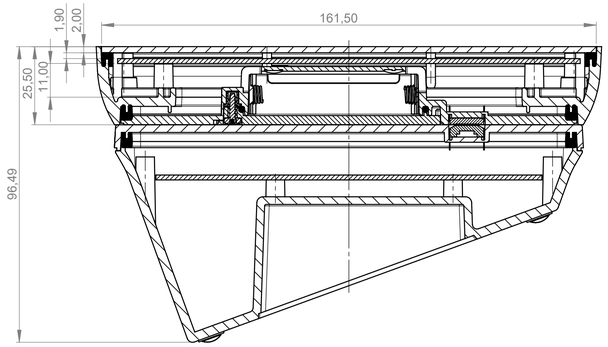

Frontplatte Al, Bodenplatte mit Rastleisten, Sockel
Front panel Al, bottom panel with snap-in strips, base

A-A

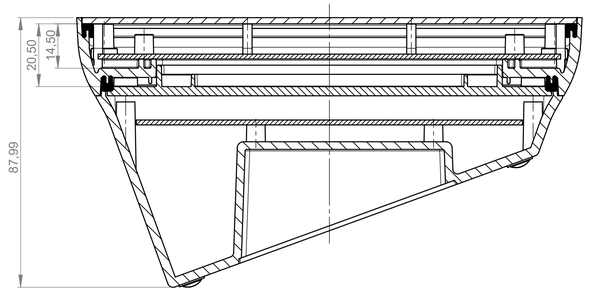

Oberteil, Bodenplatte mit Griffmulde, Sockel
Cover, bottom panel with handle recess, base

A-A

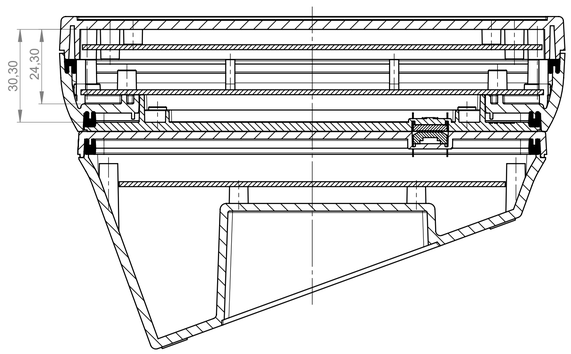

Frontplatte Al, Bodenplatte mit Griffmulde, Sockel
Front panel Al, bottom panel with handle recess, base

A-A

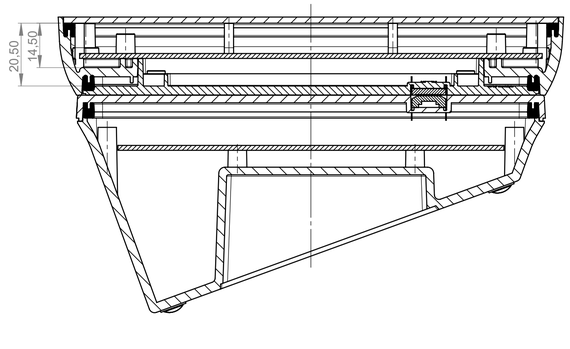

Platine Unterteil
PCB bottom part

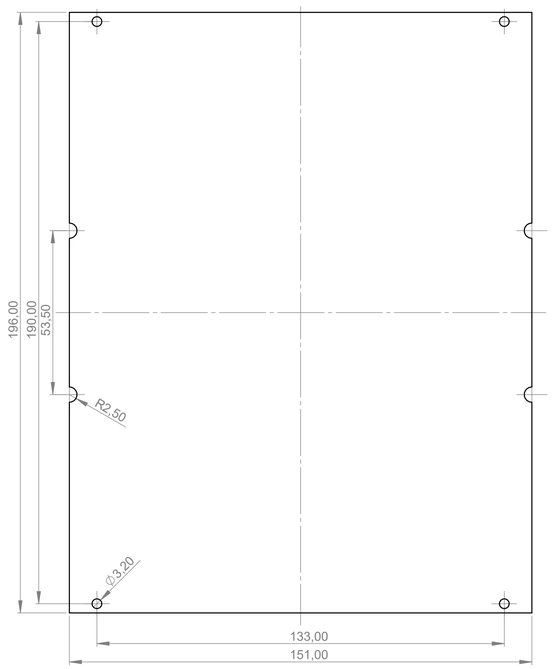

Platine Unterteil, mit Batteriefach
PCB bottom part, with battery compartment

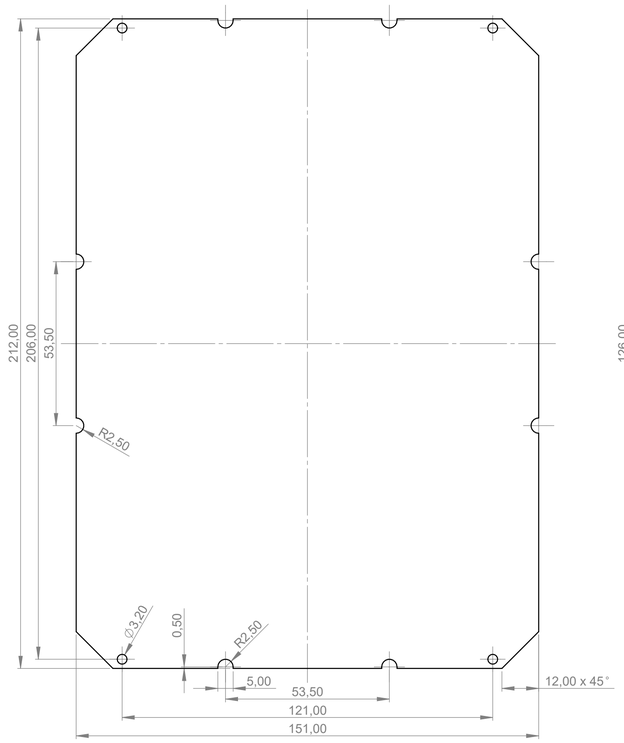

Platine Sockel
PCB base

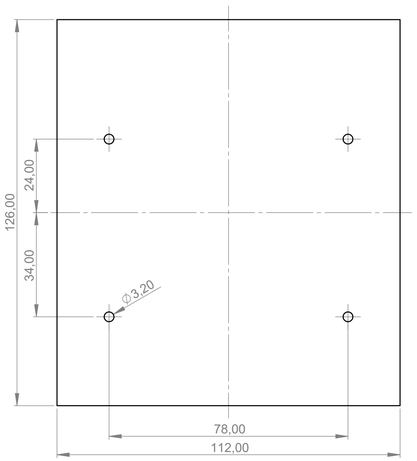

Bitte die Maße an aktuellen Teilen abnehmen.
Diese unterliegen material- und produktionsspezifischen Fertigungstoleranzen.

Please take the dimensions from current parts.
These are subject to material- and manufacturing-specific tolerances.

Informationskopie
wird nicht aktualisiert
Copy for Information
will not be updated

Technische Änderungen vorbehalten. Irrtümer oder Druckfehler begründen keinen Anspruch auf Schadenersatz. Wichtige Einbaumaße bitte direkt mit dem aktuellen Produkt abstimmen.

Subject to technical modification without prior notice. Typographical and other errors do not justify any claim for damages. All dimensions should be verified using an actual moulded part.

Sous reserve de modifications techniques. Toute erreur ou faute d'impression ne justifie aucune demande d'indemnisation. Nous prions les clients de vérifier les dimensions des composants avec les boîtiers avant le montage.

Erst. am:	17.11.2009	Toleranzen:	Status:
Erst. von:	Hasselb	DIN 16901 T130	SERIENFREIGABE
Freig. am:	24.09.2013	Volumen:	Zeichnungsart:
Freig. von:	D. Hasselbach		KUNDE
Revision:	02		DIN 6 Teil 2

This document contains proprietary information of OKW Gehäusesysteme GmbH and is tendered subject to the conditions that the information be retained in confidence not be reproduced or copied and not be used or incorporated in any product.

OKW GEHÄUSE SYSTEME

INTERFACE-TERMINAL M
Vers. I flat, cover, front panel Al

B4044***

M 1:1

Für dieses Dokument behalten wir uns alle Urheberrechte vor. Es darf auch auszugsweise weder vervielfältigt noch Dritten in irgendeiner Form zugänglich gemacht werden.

Dateiname: 00011927