DI0104

Compact evaluation unit for speed monitoring

DIA2010-ZROA/5-3600 I/MIN/OAU

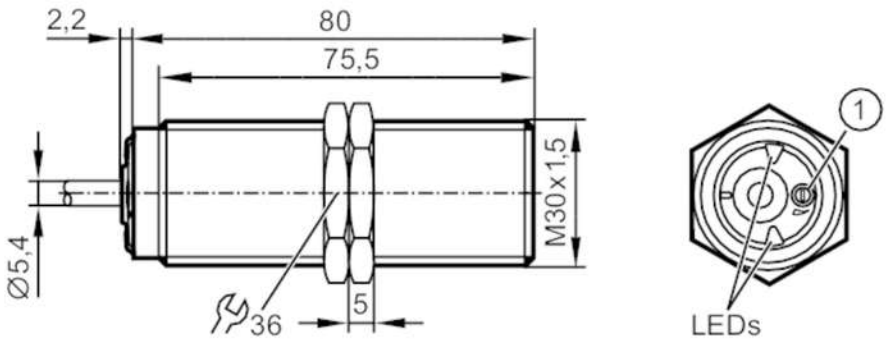

1 potentiometer

Product characteristics		
Output function		normally open
Sensing range	[mm]	10
Housing		threaded type
Dimensions	[mm]	M30 x 1.5 / L = 80
Application		
Application		simple evaluation of rotating and linear movement with regard to underspeed; blocking
Electrical data		
Nominal voltage AC	[V]	20...250
Nominal voltage DC	[V]	20...250
Nominal frequency AC	[Hz]	45...65
Protection class		II
Reverse polarity protection		yes
Outputs		
Total number of outputs		1
Output function		normally open
Max. voltage drop switching output DC	[V]	8.5
Minimum load current	[mA]	6
Max. leakage current	[mA]	1.5
Permanent current rating of switching output AC	[mA]	350
Permanent current rating of switching output DC	[mA]	100
Short-time current rating of switching output	[mA]	2200; (20 ms / 0,5 Hz)
Short-circuit proof		no
Overload protection		no
Detection zone		
Sensing range	[mm]	10
Sensing range adjustable		no
Real sensing range Sr	[mm]	10 ± 10 %

DI0104

Compact evaluation unit for speed monitoring

DIA2010-ZROA/5-3600 I/MIN/OAU

Operating distance	[mm]	0...8.1	
Measuring/setting range			
Setting range	[Imp/min]	5...3600	
Measuring principle		inductive	
Accuracy / deviations			
Correction factor		steel: 1 / stainless steel: 0.8 / brass: 0.5 / aluminium: 0.5 / copper: 0.4	
Hysteresis	[% of Sr]	10	
Response times			
Start-up delay	[s]	< 0.5	
Max. damping frequency	[Imp/min]	4800	
Software / programming			
Adjustment of the switch point		multiturn potentiometer	
Operating conditions			
Ambient temperature	[°C]	-25...80	
Storage temperature	[°C]	-25...80	
Protection		IP 65; IP 67	
Tests / approvals			
EMC		EN 60947-5-2	
MTTF	[years]	435	
Mechanical data			
Weight	[g]	281.35	
Housing		threaded type	
Mounting		flush mountable	
Dimensions	[mm]	M30 x 1.5 / L = 80	
Thread designation		M30 x 1.5	
Materials		brass special coating; PA; TPE-U	
Tightening torque	[Nm]	50	
Displays / operating elements			
Display		switching status	2 x LED, yellow
Electrical connection			
Required protection		miniature fuse to IEC60127-2 sheet 1; ≤ 2 A; fast acting	
Accessories			
Items supplied		lock nuts: 2	
Remarks			
Remarks		Recommendation Check the safe functioning of the unit after a short circuit.	

DI0104

Compact evaluation unit for speed monitoring

DIA2010-ZROA/5-3600 I/MIN/OAU

Electrical connection

Cable: 2 m, PUR; 2 x 0.5 mm²

Connection

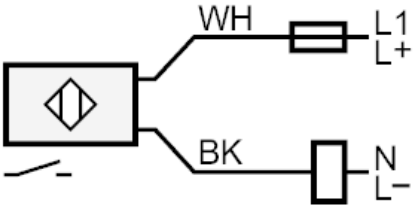

Note	miniature fuse to IEC60127-2 sheet 1 ≤ 2 A (fast acting)
	Core colours :
BK =	black
WH =	white