Safety Coupling Relay SK3D

Operating Instructions

English translation

Errors and technical changes reserved

Correct Use

EN ISO 13849-1

EN IEC 62061
IEC 61511
IEC 61508

EN 746 - 2
EN 50156 - 1

GL

SK3D is an all-purpose safe coupling relay with three safe relay-contacts. It ensures the quick and safe deactivation of the moving parts of a machine in case of danger.

The SK3D couples safe signals of e.g. pulsed PLC's to the periphery for galvanic isolation and power adjustment.

The SK3D can also be used as contact extension for a basic device of the SR-Series. Therefore is no feedback circuit necessary.

The SK3D is specially designed and certified for the use in furnaces and ancillary equipment in continuously mode according to EN 50156-1 and EN 746-2.

- *3 safe, redundant, diverse contacts*
  1 auxiliary contact
- *Coupling of safe signals for galvanic isolation and power adjustment*
- *Reduced wiring due to of selfmonitoring*
- *LED indicator for status channel 1 and 2*
- *Up to category 4, PL e, SIL 3*



Product Safety
Functional
Safety
TÜVRheinland
CERTIFIED
www.tuv.com
ID 0600000000

TYPE APPROVED PRODUCT
DNV·GL
DNVGL.COM/AF

Germanischer Lloyd
Certifikat TAE00003JF

c UL us
LISTED

Function

The safety coupling relay SK3D is designed for safe isolation of safety circuits according to EN 60204-1 and can be used up to safety category 4, PL e according to EN ISO 13849-1 and SIL 3 according 61508. The internal logical system closes the safety contacts when the control line is switched on.

If the control line is switched off, the positively driven safety contacts are opened and safely switch the machine off. It is ensured that a single fault does not lead to a loss of the safety function and that every fault is detected by cyclical self-monitoring no later than when the system is switched off and switched on again.

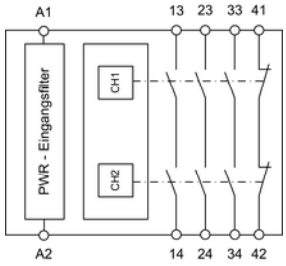

Fig. 1 Block diagram SK3D

Installation

As per EN 60204-1, the device is intended for installation in control cabinets with a minimum degree of protection of IP54. The following should be noted:

- Mounting on 35 mm rail according to EN 60715 TH35
- Ensure sufficient heat dissipation in the control cabinet
- With the AC 115 V / 230 V version, a minimum distance of 10 mm to adjacent devices must be maintained

Note: Spacer from ZANDER AACHEN (Art. No. 472596) for defined distances - See section Accessories.

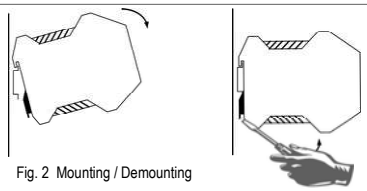

Fig. 2 Mounting / Demounting

Safety Precautions

- Installation and commissioning of the device must be performed **only by authorized personnel**.
- Observe the country-specific regulations when installing the device.
- The electrical connection of the device is only allowed to be made with the device isolated.
- The wiring of the device must comply with the instructions in this user information, otherwise there is a risk that the safety function will be lost.
- It is not allowed to open the device, tamper with the device or bypass the safety devices.
- All relevant safety regulations and standards are to be observed.
- There have to be the same electrical potential on the current paths 13-14 and 23-24.
- The overall concept of the control system in which the device is incorporated must be validated by the user.
- Failure to observe the safety regulations can result in death, serious injury and serious damage.
- Note down the version of the product (see label "Ver.") and check it prior to every commissioning of a new device. If the version has changed, the overall concept of the control system in which the device is incorporated must be validated again by the user.
- The year of manufacture can be found on the type label on the device. It is located at the end of the line of the voltage specification, below the ID number.

Electrical Connection

- Consider the information in the section "Techn. data"
- External fusing of the safety contacts must be provided
- Max. line resistance at nominal voltage is 50 Ω
- If the device does not function after commissioning, it must be returned to the manufacturer unopened. Opening the device will void the warranty
- Increasing service life if driving inductive loads by using appropriate protective circuitry (e.g. freewheeling diode)

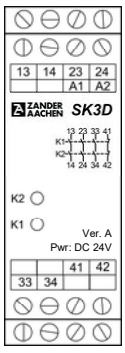

Fig. 3 Terminals

A1:	*Control line*
A2 :	*Control line*
13-14:	*Safety contact 1*
23-24:	*Safety contact 2*
33-34:	*Safety contact 3*
41-42:	*Auxiliary contact*

Note:
Fig. 3 shows the DC 24 V variant.

S01
Ver. A
E61-056-00

H. ZANDER GmbH & Co. KG • Am Gut Wolf 15 • 52070 Aachen • Germany
Tel +49 (0)241 9105010 • Fax +49 (0)241 91050138 • info@zander-aachen.de • www.zander-aachen.de

Applications

The device has to be wired as shown in Fig. 4 to Fig. 7

SK3D as Coupling Relay for safe PLC Output

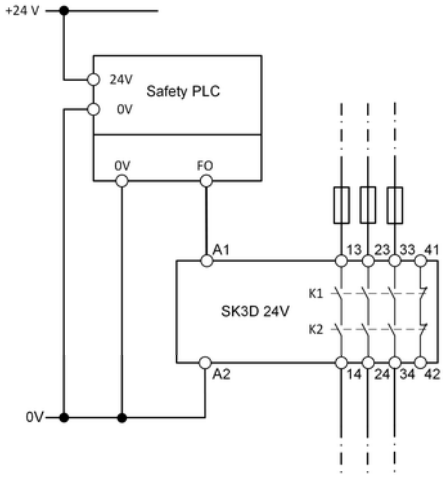

Fig. 4:
Single channel control with safe PLC output.
(Category 4, up to PL e / SIL 3, if the safety output meets PL e / SIL 3 and short circuits in line between the safety output and A1 of the SK3D can be ruled out - see Advice)

Caution:
Safety contacts will be activated immediately by switching on the control line.
Make sure that A2 is the correct reference potential to the switching voltage A1.

Advice:
According to EN ISO 13849-2 the wiring has to be in a short-circuit-proof control cabinet with a minimum degree of protection of IP54.
For example EN ISO 13849-2, table D4 - Cables within an electrical installation space in accordance with EN 60204-1.

A feedback loop for monitoring the SK3D is **not** necessary. The SK3D monitors itself.
However, if a feedback loop is necessary for the application, this can be achieved by wiring the feedback to the auxiliary contact 41-42.
(see Fig.6 or Fig. 7).

Attention:

- Make sure that the reference potential of the signal generator and the SK3D is the same
- It must be ensured that any switch-on pulses (light test) sent by the signal generator do not lead to a short activation of the safety relay and should therefore basically be deactivated

SK3D as Expansion Module - Control with safe relay contacts

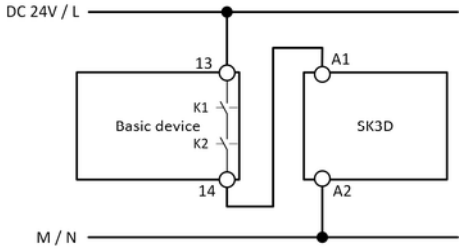

Fig. 5:
Wiring as contact extension of a basic device (for example from Zander SR-Series)
(Category 4, up to PL e / SIL 3, if the safety output meets PL e / SIL 3 and short circuits in line between the safety output and A1 of the SK3D can be ruled out - see Advice)

Caution:
Safety contacts will be activated immediately by switching on the basic device.

Advice:
According to EN ISO 13849-2 the wiring has to be in a short-circuit-proof control cabinet with a minimum degree of protection of IP54.
For example EN ISO 13849-2, table D4 - Cables within an electrical installation space in accordance with EN 60204-1.

A feedback loop for monitoring the SK3D is **not** necessary. The SK3D monitors itself.
However, if a feedback loop is necessary for the application, this can be achieved by wiring the feedback to the auxiliary contact 41-42
(see Fig.6 or Fig. 7).

SK3D as Expansion Module - Feedback Loop

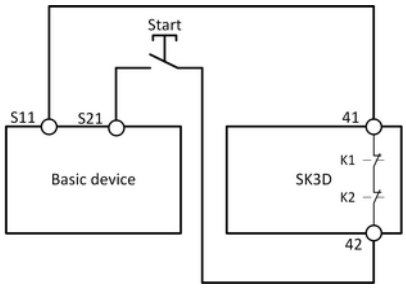

Fig. 6:
Wiring of the feedback loop for using a manual, monitored start.

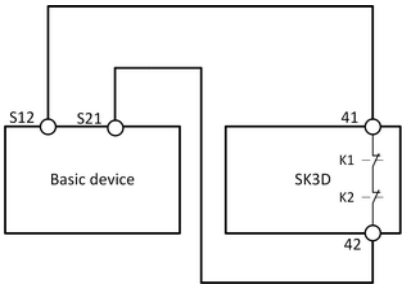

Fig. 7:
Wiring of the feedback loop for using an automatic start.

Commissioning Procedure

Advice: Follow the guidelines in *„Electrical Connection"* during the start-up.

1. Feedback loop:
If a feedback loop is necessary for the application, it has to be wired as shown in Fig.6 or Fig. 7.

2. Control line:
Connect the control line to the contact A1 and M/N or 0V to A2. (Fig. 1).

Caution: Power does not have to be activated yet.

3. Starting the device:
Turning on the SK3D via A1.

Caution:
The safety contacts will close immediately by turning on the control line. The LEDs ***K1*** and ***K2*** are lit.

4. Triggering safety function:
Turning off the SK3D via A1.
The LEDs ***K1*** and ***K2*** go out.

5. Reactivation:
Turning on the SK3D via A1. The LEDs ***K1*** and ***K2*** are lit.

H. ZANDER GmbH & Co. KG • Am Gut Wolf 15 • 52070 Aachen • Germany
Tel +49 (0)241 9105010 • Fax +49 (0)241 91050138 • info@zander-aachen.de • www.zander-aachen.de

Checks and maintenance

The following checks are regulary required to ensure proper and continuous functioning

- Check the switching function
- Check for signs of manipulation and safety function bypassing
- Check if the device is mounted and connected securely
- Check for soiling

Check if the safety device is working properly, in particular:

- Every time after initial commissioning
- Every time after replacing a component
- After every fault in the safety circuit

Regardless of this, the safe functioning of the safety device should be checked at suitable intervals, e.g. as part of the maintenance schedule of the plant. Not maintenance ist required for the device itself.

What to do in Case of a Fault?

Device does not switch on:

- *Check the wiring by comparing it to the wiring diagrams.*
- *Check the control line at A1.*
- *If the feedback loop is used, is it closed?*
- *Check reference potential.*

If the fault still exists, perform the steps listed under “Commissioning Procedure”.

If these steps do not remedy the fault either, return the device to the manufacturer for examination.

Opening the device is impermissible and will void the warranty.

Technical data

In compliance with	EN 60204-1; EN ISO 13849-1; EN IEC 62061; EN 50156-1 EN 746-2; IEC 61508 Parts 1-2 and 4-7; IEC 61511-1
Operating voltage	AC 230 V, AC 115 V, DC 24 V, AC: 50-60 Hz
Allowable tolerance	+ / - 10 %
Power consumption	**DC 24 V:** approx. 2 W **AC 230 V:** approx. 6.9 VA
Pulse suppression (only DC 24 V) Switch-Off pulse / dark test (Pulse width / Pulse rate)	≤ 6 ms / ≥ 200 ms
Safety contact	3 NO
Auxiliary contacts	1 NC
Switching voltage max.	AC 250 V
Safety contact breaking capacity (13-14, 23-24, 33-34) (6 switching cycles/ min) Max. total current through all 3 contacts:	AC: 250 V, 2000 VA, 8 A for ohmic load 250 V, 5 A for AC-15 DC: 30 V, 240 W, 8 A for ohmic load 24 V, 4 A, for DC-13 UL: B300 / R300 15 A (13-14, 23-24, 33-34)
Contact rating of auxiliary contact (41-42)	AC: 250 V, 500 VA, 2 A for resistive load DC: 30 V, 60 W, 2 A for resistive load
Minimum voltage/ current	5 V, 10 mA
External fuses for safety contacts	10 A gG 6 A gG for applications acc. to EN 50156-1 and EN 746-2 (See EN 50156-1; Chapter 10.5.5.3.4)
Wire width	0.14 - 2.5 mm^2
Tightening moment (Min. / Max.)	0.5 Nm / 0.6 Nm
Typ. switch-on delay / switch-off delay fo NO contacts	< 30 ms / < 60 ms
Max. line resistance at nominal voltage	50 Ω
Contact material	$AgSnO_2$
Service life	mech. approx. 1 x 10^7 cycles
Rated impulse withstand voltage	2.5 kV (control voltage / contacts)
Dielectric strength (EN 60664-1)	6 kV between relays safety loops, control lines and internal logic
Rated insulation voltage	250 V
Protection	IP20
Temperature range	DC 24 V: -15 °C up to +55 °C AC 115 V / 230 V: -15 °C up to +55 °C (see load curve)
Max. altitude	≤ 2000 m (above sea level)
Degree of pollution / Overvoltage category	2 / 3 (EN 60664-1)
Weight	approx. 230 g
Mounting	DIN rail according to EN 60715 TH35

H. ZANDER GmbH & Co. KG • Am Gut Wolf 15 • 52070 Aachen • Germany
Tel +49 (0)241 9105010 • Fax +49 (0)241 91050138 • info@zander-aachen.de • www.zander-aachen.de

Disclaimer and warranty

If the above mentioned conditions for appropriate use are not complied with or if the safety instructions are not followed or if any maintenance operations are not carried out as required, this shall lead to an exclusion of liability and loss of warranty.

ATTENTION!

We would like to point out that it is the full responsibility of the operator to ensure a plant availability.
Using the SK3D, a safety emergency stop relay according to

- EN ISO 13849-1
- EN IEC 62061
- IEC 61508
- EN 50156-1
- EN 746-2
- IEC 61511-1

is used, which will be brought into the safe state when the safety function is requested.

This means that the connected load is switched off as soon as a request from connected sensor elements or diagnostic measures detects a dangerous state, e.g. caused by a component fault.

Since process-related applications in particular have high demands on availability, limited availability can also have significant consequences. It is therefore recommended to stock a second unit to avoid long downtimes in such a case. These are recommendations of the manufacturer, the evaluation of the importance of the plant availability is the sole responsibility of the operator.

Load Curve

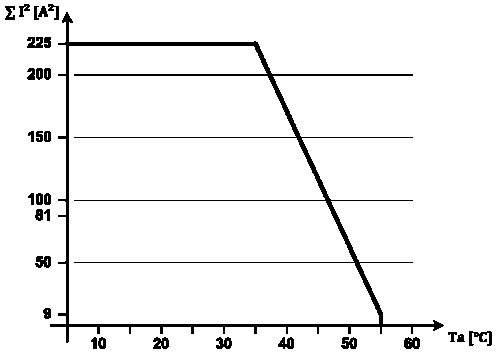

Max. cumulative current depending on the ambient temperature for AC 115 V / 230 V variants with 10 mm space between the devices

Cumulative current: $\sum I^2 = (I_1 + I_2 + I_3)^2$

Dimension Drawing

Fixed Terminals

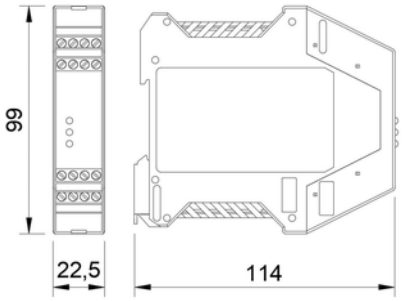

Plug-In Terminals

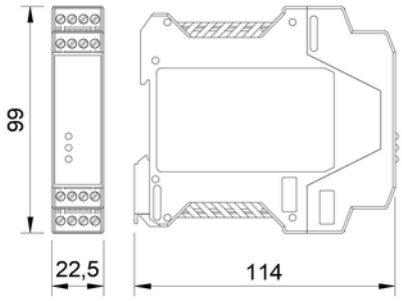

Note: Actual number of front LEDs may differ from the number shown in the drawing, depending on the variant.

Variants

Order No. 472280	SK3D, AC 230 V (50-60 Hz),	fixed screw terminals
Order No. 472281	SK3D, AC 115 V (50-60 Hz),	fixed screw terminals
Order No. 472282	SK3D, DC 24 V,	fixed screw terminals
Order No. 474280	SK3D, AC 230 V (50-60 Hz),	incl. plug-in screw terminals
Order No. 474281	SK3D, AC 115 V (50-60 Hz),	incl. plug-in screw terminals
Order No. 474282	SK3D, DC 24 V,	incl. plug-in screw terminals
Order No. 475280	SK3D, AC 230 V (50-60 Hz),	incl. push-in twin spring connector
Order No. 475281	SK3D, AC 115 V (50-60 Hz),	incl. push-in twin spring connector
Order No. 475282	SK3D, DC 24 V,	incl. push-in twin spring connector

Accessories

Order No. 472592	EKLS4,	set of plug-in screw terminals
Order No. 472595	EKLZ4,	set of push-in twin spring connector
Order No. 472596	Spacer Electric Cabinet	rail spacer 5mm, PU = 12 pcs

H. ZANDER GmbH & Co. KG • Am Gut Wolf 15 • 52070 Aachen • Germany
Tel +49 (0)241 9105010 • Fax +49 (0)241 91050138 • info@zander-aachen.de • www.zander-aachen.de

Safety Charcteristics

Safety characteristics according to EN ISO 13849-1

Load - AC-15 / DC-13	**≤ 1 A / ≤ 1 A**	**≤ 2 A / ≤ 2 A**	**≤ 5 A / ≤ 4 A**
Max. duration of use [Years]	20	20	20
Category	4	4	4
PL	e	e	e
PFHd [1/h]	1.2E-08	1.2E-08	1.2E-08
nop [Cycles / year] - AC-15 / DC-13	≤ 50,000 / 350,000	≤ 35,000 / ≤ 100,000	≤ 8,760 / ≤ 8,760

Safety characteristics according to IEC 61508 - High Demand

Conditions: Days of operation/year: 365; Hours/Day: 24; Switching-Cycle/Hour: 1; Maximum load AC-15 / DC-13	
Max. duration of use [Years]	20
Proof-Test-Intervall [Years]	20
PFH [1/h]	3.31E-10
SIL	3

Safety characteristics for alternate 1oo1 structure for process industry - High Demand

Conditions: Days of operation/year: 365; Hours/Day: 24; Switching-Cycle/Hour: 1; Maximum load AC-15 / DC-13	
Device type	A
HFT	0
SIL	3
SFF [%]	99.94
λ_{SD} [FIT]	0
λ_{SU} [FIT]	108.57
λ_{DD} [FIT]	33.1
λ_{DU} [FIT]	0.33
PFH [1/h]	3.31E-10

Safety characteristics according to IEC 61508 - Low Demand

Conditions: Maximum load AC-15 / DC-13	
Max. duration of use [Years]	20
Proof-Test-Intervall [Years]	9
PFD_{AVG}	9.94E-05
SIL	3

Safety characteristics for alternate 1oo1 structure for process industry - Low Demand

Conditions: Maximum load AC-15 / DC-13	
Device type	A
HFT	0
SIL	3
SFF [%]	97.21
λ_{SD} [FIT]	0
λ_{SU} [FIT]	108.67
λ_{DD} [FIT]	0
λ_{DU} [FIT]	3.12
PFD_{avg} (e.g. for T = 1 year)	1.37E-05

Proof-Test

In order to check the proper function of the device, the following steps have to be carried out

- Demand the safety function by opening the safety circuit. Check that the relay contact (13-14; 23-24; 33-34) opened by activation of the safety function.
- Close the safety circuit and start the device again. Check that the safety contacts (13-14; 23-24; 33-34) closed again.

If the device doesn't switch on again, the proof-test failed.

ATTENTION:

If the proof-test fails, the device must be replaced. Otherwise there is a risk of loss of functional safety.

H. ZANDER GmbH & Co. KG • Am Gut Wolf 15 • 52070 Aachen • Germany
Tel +49 (0)241 9105010 • Fax +49 (0)241 91050138 • info@zander-aachen.de • www.zander-aachen.de

CE
Declaration

CE Konformitätserklärung
EC Declaration of Conformity
Déclaration de conformité

Hersteller: H. ZANDER GmbH & Co. KG
Producer: Am Gut Wolf 15 • 52070 Aachen • Deutschland
Fabricant:

Produktgruppe: Sicherheits-Not-Halt-Schaltgeräte
Product Group: Safety emergency stop switching devices
Groupe de produits: Relais de sécurité d'arrêt d'urgence

Produkt Name Product Name Nom du produit	**Anbringung der CE-Kennzeichnung** Affixing of CE marking: Application du marque CE	**Zertifikats-Nr.** No of Certificate N° du certificat
SRLC	2023	01/205/5463.03/23
SR2C	2023	01/205/5463.03/23
SR3C	2023	01/205/5463.03/23
SR3D	2023	01/205/5463.03/23
SR3A	2023	01/205/5463.03/23
SR3AD	2023	01/205/5463.03/23
SK3D	2023	01/205/5463.03/23

Die Produkte stimmen mit den Vorschriften folgender Europäischer Richtlinien überein:
The products conform with the essential protection requirements of the following European directives:
Les produits sont conformes aux dispositions des directives européennes suivantes:

2006/42/EG : Maschinenrichtlinie
2006/42/EG : Machinery directive
2006/42/EG : Directive Machines

2011/65/EU: RoHS Richtlinie
2011/65/EU: RoHS directive
2011/65/EU: Directive RoHS

2014/30/EU : EMV Richtlinie
2014/30/EU : EMC directive
2014/30/EU : Directive CEM

Die Übereinstimmung der bezeichneten Produkte mit den Vorschriften der o.a. Richtlinie wird, falls anwendbar, nachgewiesen durch die vollständige Einhaltung folgender Normen:
If applicable, the conformity of the designated products is proved by full compliance with the following standards:
Le strict respect des norms suivantes confirme, s´il y a lieu, que les produits désignés sont conformes aux dispositions de la directive susmentionnée:

EN 61326-3-1:2018 **EN IEC 61000-6-2:2019** **IEC 63000:2018**

Gemäß Zertifikat der benannten Stelle:
According to the certificate of the below mentioned organisation:
Selon de organisme notifé:

EN ISO 13849-1:2015 **EN ISO 13849-1:2023** **IEC 61508 Parts 1-7:2010**

Benannte Stelle / Organisme notifé: Nr. NB 0035
TÜV Rheinland Industrie Service GmbH
51105 Köln
Zertifizierungsstelle für Maschinen

Dokumentationsbeauftragte/-r: Christiane Nittschalk
Documentation manager
Autorisé à constituer le dossier technique

Aachen, den 24.10.2023

Dr.-Ing. Marco Zander
Geschäftsleitung
General Manager
Direction

Dipl.-Ing. Alfons Austerhoff
Leiter CE-Konformitätsbewertung
Manager for EC declaration of conformity
Responsable évaluation de conformité CE

F7.307/03

H. ZANDER GmbH & Co. KG • Am Gut Wolf 15 • 52070 Aachen • Germany
Tel +49 (0)241 9105010 • Fax +49 (0)241 91050138 • info@zander-aachen.de • www.zander-aachen.de