7305 BECBM

Popular item
SKF Explorer

Dimensions

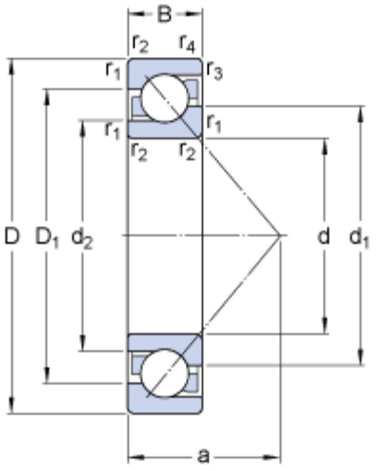

d		25	mm
D		62	mm
B		17	mm
d_1	≈	39.75	mm
d_2	≈	32.38	mm
D_1	≈	48.25	mm
a		26.8	mm
$r_{1,2}$	min.	1.1	mm
$r_{3,4}$	min.	0.6	mm

Abutment dimensions

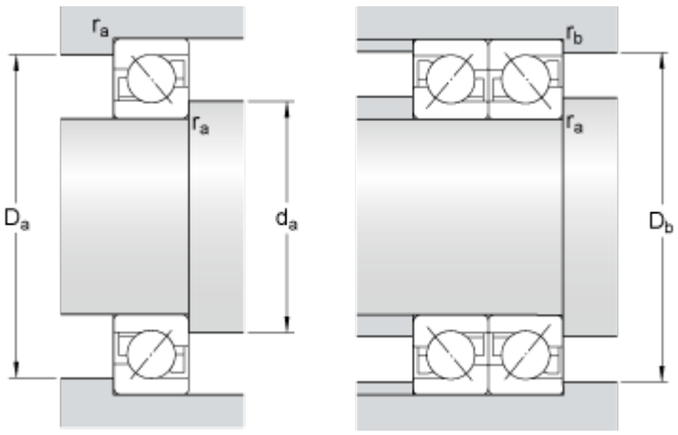

d_a	min.	32	mm
D_a	max.	55	mm
D_b	max.	57.8	mm
r_a	max.	1	mm
r_b	max.	0.6	mm

Calculation data

Basic dynamic load rating	C	26.5	kN
Basic static load rating	C_0	15.3	kN
Fatigue load limit	P_u	0.655	kN
Reference speed		14000	r/min
Limiting speed		19000	r/min
Calculation factor	A	0.00391	
Calculation factor	k_r	0.1	
Calculation factor	e	1.14	

Single bearing or bearing pair arranged in tandem

Calculation factor	X	0.35	

Calculation factor	Y_0	0.26
Calculation factor	Y_2	0.57

Bearing pair arranged back-to-back or face-to-face

Calculation factor	X	0.57
Calculation factor	Y_0	0.52
Calculation factor	Y_1	0.55
Calculation factor	Y_2	0.93

Mass

Mass bearing	0.23	kg