SOUTHCO	SOUTHCO N: 96 LIFT-OFF HINGE OFFSET STYLE, TYPE A	DATE	DRAWN	CHKD	SCALE	DRAWING NUMBER
		7 87	RHB		NTS	J-96-50-510-50

REV. LET.	DATE	BY-CHKD	REVISIONS
A	9-18-87	[illegible]	PRN: 96-19
B	1-8-88	MN	PRN: 96-22 (.205 WAS .201)
C	9-16-91	[illegible]	PRN: 96-36B
D	10-25-91	JAO	PRN: 96-42
E	12 JAN 93	JC	PRN: S-1-03
F	25MAR93	[illegible]	PRN: 96-52

ITEM	PART N:	MATERIAL	FINISH
ASSEMBLY	96-50-510-50	—	—
OFFSET KNUCKLE	—	ZINC	BLACK POWDER COATED
IN LINE KNUCKLE	—	ZINC	BLACK POWDER COATED
WASHER	—	NYLON	BLACK

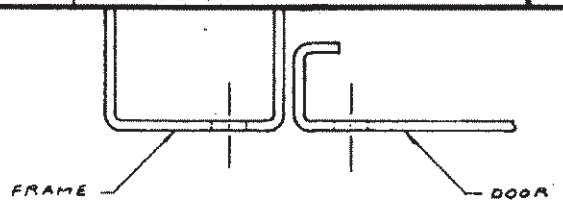

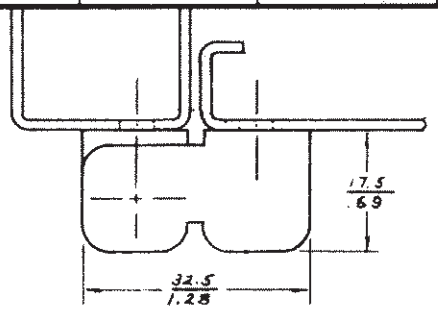

ATTACH HINGE WITH M5 x 0.8 SCREWS. MAXIMUM SCREW LENGTH = DOOR OR FRAME THICKNESS PLUS 10.16/.400

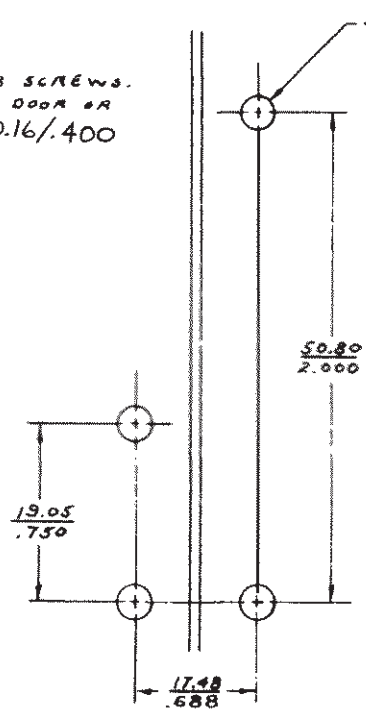

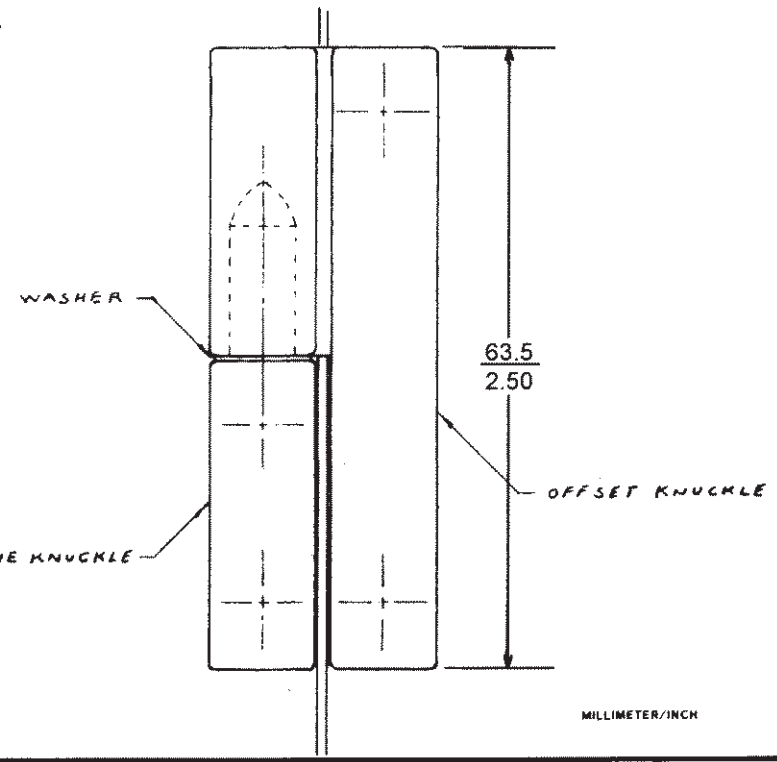

MILLIMETER/INCH MILLIMETER / INCH

PROPRIETARY ITEM—EXCEPT FOR USES EXPRESSLY GRANTED IN WRITING, INFORMATION DISCLOSED HEREON IS CONFIDENTIAL AND ALL RIGHTS, PATENT AND OTHERWISE, ARE RESERVED BY SOUTHCO, INC.

DRAWING NUMBER J-96-50-510-50