Type: LBVR/A

Battery Voltage Relay

Terminal Protection to IP20



Dims: to DIN 43880
W. 17.5mm

- ❑ ***NEW*** **17.5mm DIN rail housing**
- ❑ **Microprocessor based**
- ❑ **Suited to 12V and 24V batteries**
- ❑ **Monitors own supply and detects and Under voltage condition**
- ❑ **Adjustment for Under voltage trip level (9 – 28V)**
- ❑ **Adjustment for Time delay (from an Under voltage condition)**
- ❑ **1 x SPDT relay output 8A**
- ❑ **Green LED indication for supply status**
- ❑ **Red LED indication for relay status**

ISO 9001:2015
Cert. No. 14125771

FUNCTION DIAGRAM

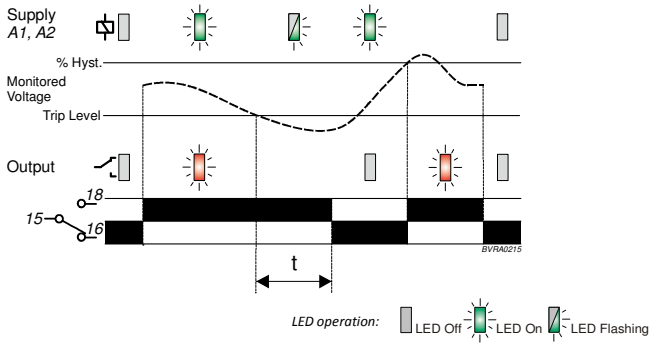

INSTALLATION AND SETTING

Installation work must be carried out by qualified personnel.

- BEFORE INSTALLATION, ISOLATE THE SUPPLY.
- Connect the unit as required taking note of the polarity of the connections. Terminal **A1** is the positive connection and **A2** the negative.

Setting the unit.

- Set the Under voltage "Trip Level (V)" ❹ adjustment to the voltage required.
- Set the "Delay (t)" ❸ to minimum.

Applying power.

- Apply power and the green "Power supply" ❶ and red "Relay" ❷ LED's will illuminate, the relay will energise and contacts 15 and 18 will close. Refer to the troubleshooting table if the unit fails to operate correctly.
- If the supply voltage drops below the trip level setting, the green LED will start to flash. The relay will then de-energise (contacts 15 and 18 open) after the delay period "t" and the red LED will extinguish. The green LED will then remain permanently lit.
- When the voltage increases above the trip level + hysteresis, then relay will re-energise and red LED illuminate.

Troubleshooting.

The table below shows the status of the unit during a fault condition.

Supply fault	Green LED	Red LED	Relay
No supply	Off	Off	De-energised
Under voltage condition (during timing)	Flashing	On	Energised for set delay (t)
Under voltage condition (after timing)	On	Off	De-energised

TECHNICAL SPECIFICATION

Supply/monitoring voltage U **(A1, A2):**	12 – 24V DC	
Supply variation:	75 – 125% U	
Power consumption (max.):	3W	
Monitoring mode:	Under voltage	
Trip level:	9 – 28V DC	
Hysteresis:	≈ 5% of trip level (factory set)	
Setting accuracy:	± 10%	
Repeat accuracy:	± 0.5% at constant conditions	
Response time:	≈ 100mS	
Time delay (t):	0 – 30 Sec. (± 5%)	
	Note: actual delay (t) = adjustable delay + response time	
Power on delay (Td):	≈ 1 sec. (worst case = Td x 2)	
Power on indication:	Green LED	
Relay status indication:	Red LED	
Ambient temp:	-20 to +60°C	
Relative humidity:	+95%	
Output **(15, 16, 18)**:	SPDT relay	
Output rating:	AC1	250V 8A (2000VA)
	AC15	250V 5A (no), 3A (nc)
	DC1	25V 8A (200W)
Electrical life:	≥ 150,000 ops at rated load	
Dielectric voltage:	2kV AC (rms) IEC 60947-1	
Rated impulse withstand voltage:	4kV (1.2/50µS) IEC 60664	
Housing:	Orange flame retardant UL94	
Weight:	70g	
Mounting option:	On to 35mm symmetric DIN rail to BS EN 60715 or direct surface mounting via 2 x M3.5 or 4BA screws using the black clips provided on the rear of the unit.	
Terminal conductor size	≤ 2 x 2.5mm² solid or stranded	
Approvals:	c UL us LISTED IND. CONT. EQ. E111187	
	Conforms to IEC. CE, and RoHS Compliant. EMC: Immunity/Emissions to EN 61000-6	

CONNECTION DIAGRAM

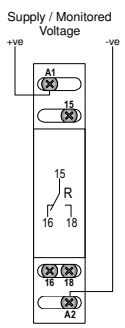

SETTING DETAILS

1. Power supply status (Green) LED
2. Relay output status (Red) LED
3. "Delay" adjustment
4. "Under" trip level adjustment

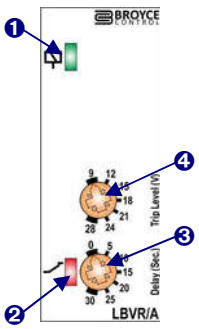

DIMENSIONS

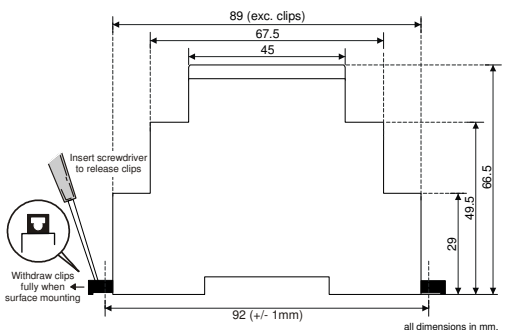

Broyce Control Ltd., Pool Street, Wolverhampton, West Midlands WV2 4HN. England
Tel: +44 (0) 1902 773746 Fax: +44 (0) 1902 420639 Email: sales@broycecontrol.com Web: www.broycecontrol.com

The Information provided in this literature is believed to be accurate (subject to change without prior notice); however, use of such information shall be entirely at the user's own risk.