Your Expert Partner for **Human Machine Interfaces**

Lamp block

Distribution by
Rs-online

704.950.1/D



https://rs-online.eao.com/component/704.950.1...

Your product:



704.950.1/D
Lamp block

ELECTRICAL CHARACTERISTICS

Standards:	The switches comply with the “Standards for low-voltage switching devices” DIN EN 60947-1/DIN EN 60947-5-1

MECHANICAL CHARACTERISTICS

Terminal:	Double plug-in terminal, 6.3 x 0.8 mm
Switching positions:	2 positions
Wire cross section:	Double plug-in terminal 2 x 6.3 mm x 0.8 mm
Weight:	0.013 kg

AMBIENT CONDITION

IP Protection:	IP00
Operating temperature:	– 40 °C ... + 55 °C
Storage temperature:	– 40 °C ... + 85 °C
Shock resistance:	Max. 300 m/s^2, pulse width 11 ms (sinusoidal EN IEC 60068-2-27)
Vibration resistance:	Max. 100 m / s^2 from 10 Hz ... 500 Hz, (sinusoidal EN IEC 60068-2-6)
Climate resistance:	Relative humidity, max. 95%, non-condensing

CERTIFICATE

REACH:	REACH compliant
RoHS:	RoHS compliant

OTHER

Short Description:	Lamp block, Plastic, Double plug-in terminal, 6.3 x 0.8 mm

Housing material: Plastic

Product attributes: Terminals nickel plated and blank Cu/Sn

Hints: When using the lamp block, the application guidelines must be observed.

Wiring diagrams:

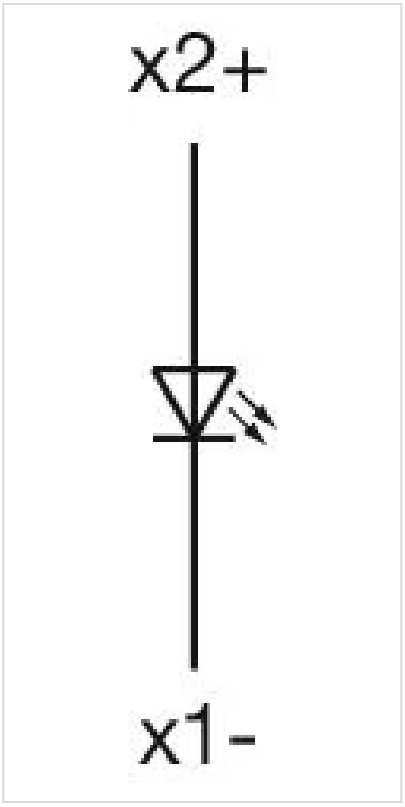

Dimension drawings:

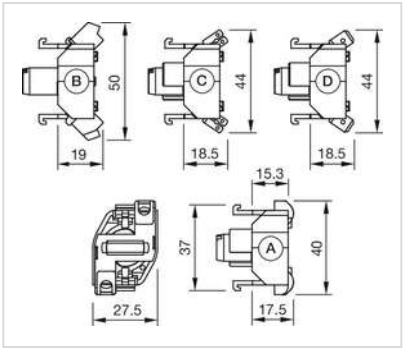

A = Screw terminal
B = Push-in terminal (PIT)
C = Plug-in terminal 6.3 mm x 0.8 mm
D = Double plug-in terminal 6.3 mm x 0.8 mm