FAG



3212-BD-XL-2HRS-TVH

Angular contact ball bearing

Schaeffler ID:
0637295200000

Angular contact ball bearing 32..-BD-XL-2HRS-TVH, double row, X-life, seals, plastic cage

X-life

Technical information

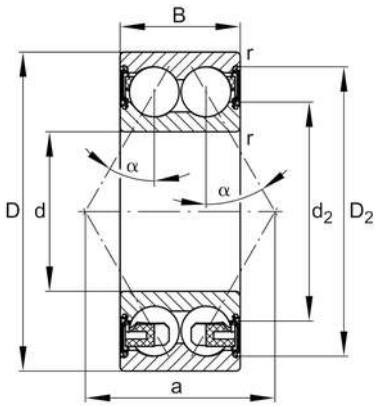

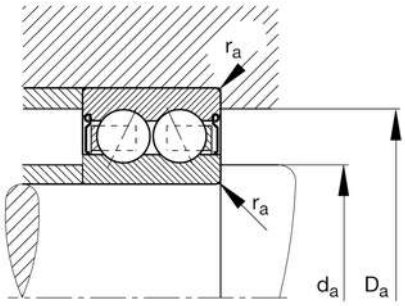

Main Dimensions & Performance Data

d	60 mm	Bore diameter
D	110 mm	Outside diameter
B	36,5 mm	Width
C_r	75.000 N	Basic dynamic load rating, radial
C_{0r}	64.000 N	Basic static load rating, radial
C_{ur}	4.400 N	Fatigue load limit, radial
n_G	4.750 1/min	Limiting speed
	1,27 kg	Weight

Mounting dimensions

$d_{a\ min}$	69 mm	Minimum diameter shaft shoulder
$D_{a\ max}$	101 mm	Maximum diameter of housing shoulder
$r_{a\ max}$	1,5 mm	Maximum fillet radius

Dimensions

r_{min}	1,5 mm	Minimum chamfer dimension
D_2	100,5 mm	Caliber diameter outer ring
d_2	76,6 mm	Caliber diamter inner ring
a	64,7 mm	Distance between the apexes of the pressure cones
α	30 °	Contact angle

Temperature range

T_{min}	-20 °C	Operating temperature min.
T_{max}	100 °C	Operating temperature max.

The datasheet is only an overview of dimensions and basic load ratings of the selected product. Please always observe all further information and guidelines for this product. For further information you can use the contact form on our website.