E12384

Coloured surround for touch sensors

BLACK COVER RING FOR KT

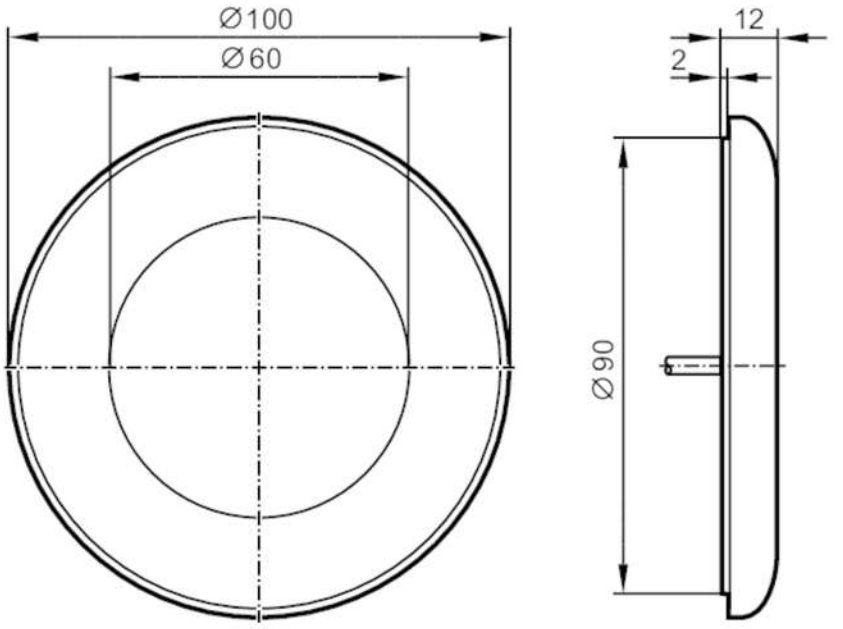

Application		
Design		for type KT50
Mechanical data		
Weight	[g]	31.2
Dimensions	[mm]	100 x 10 x 100
Materials		PC black
Remarks		
Pack quantity		2 pcs.