NOTES: (G)

1. DRAWING TO BE INTERPRETED IN ACCORDANCE WITH THE CURRENT REVISION OF ASME Y14.5.
2. THIS PART/PRODUCT IS TO BE MANUFACTURED WITH THE LATEST APPLICABLE REGULATIONS OF EC DIRECTIVES FOR THE RESTRICTION OF THE USE OF HAZARDOUS SUBSTANCES IN ELECTRICAL AND ELECTRONIC EQUIPMENT (ROHS), WASTE ELECTRICAL AND ELECTRONIC EQUIPMENT (WEEE) AND REGISTRATION, EVALUATION, AUTHORIZATION AND RESTRICTION OF CHEMICALS (REACH)
3. LABEL TO INCLUDE:
   PART NUMBER
   "OTTO 21649"
   DATE CODE (YYWW)
4. OUTPUTS ARE FROM THE CENTER TO THE FULL TRAVEL POSITION IN EACH DIRECTION.
   OPTIONS "AA", "BB", "CC", "DD", "EE", "FF" PROVIDE INCREASED VOLTAGE IN +X, +Y; AND DECREASING VOLTAGE IN -X, -Y DIRECTION FROM ONE OUTPUT PER AXIS.
   OPTIONS "GG" AND "HH" PROVIDE INCREASING VOLTAGES . IN ALL DIRECTIONS (+X, +Y, -X, -Y) FROM 2 OUTPUTS PER AXIS.
5. OPTIONS "BB" AND "EE" PROVIDE REDUNDANT OUTPUT 2 WHICH DUPLICATES OUTPUT 1
   OPTIONS "CC" AND "FF" PROVIDE REDUNDANT OUTPUT 2 WHICH IS INVERSE OF OUTPUT 1.
6. FULL BOOT VERSION SHOWN AS DEFAULT. SEE PAGE 4 FOR ALTERNATIVE SWITCH/BOOT STYLES.
7. GATED IS RESTRICTED MOVEMENT IN Y AXIS ONLY.
8. USE N FOR FULL BOOT, Z-AXIS, & NO PUSHBUTTON OPTIONS.
9. 1- 9 USED ONLY FOR PUSHBUTTON OPTIONS. NOT APPLICABLE IN Z-AXIS.

(G) JHT-

SWITCH / BOOT STYLE (6)

11 = WITH P9 PUSHBUTTON & FULL BOOT
12 = WITH P9 PUSHBUTTON & HALF BOOT
21 = WITHOUT PUSHBUTTON & FULL BOOT
32 = Z AXIS WITH DETENT & HALF BOOT, SINGLE OUTPUT
42 = Z AXIS WITH FRICTION HOLD & HALF BOOT, SINGLE OUTPUT
52 = Z AXIS RETURN TO CENTER & HALF BOOT, SINGLE OUTPUT
62 = Z AXIS WITH DETENT & HALF BOOT, DUAL OUTPUT
72 = Z AXIS WITH FRICTION HOLD & HALF BOOT, DUAL OUTPUT
82 = Z AXIS RETURN TO CENTER & HALF BOOT, DUAL OUTPUT
92 = Z AXIS WITH DETENT & HALF BOOT, SINGLE OUTPUT WITH 2 PUSHBUTTONS
A2 = Z AXIS WITH FRICTION HOLD & HALF BOOT, SINGLE OUTPUT WITH 2 PUSHBUTTONS
B2 = Z AXIS RETURN TO CENTER & HALF BOOT, SINGLE OUTPUT WITH 2 PUSHBUTTONS
C2 = Z AXIS WITH DETENT & HALF BOOT, DUAL OUTPUT WITH 2 PUSHBUTTONS
D2 = Z AXIS WITH FRICTION HOLD & HALF BOOT, DUAL OUTPUT WITH 2 PUSHBUTTONS
E2 = Z AXIS RETURN TO CENTER & HALF BOOT, DUAL OUTPUT WITH 2 PUSHBUTTONS

GATING

1 = GATED; SINGLE AXIS -- RETURN TO CENTER (7)
2 = (SPARE)
3 = OMNI DIRECTIONAL; ROUND SMOOTH FEEL
4 = OMNI DIRECTIONAL; ROUND ON-AXIS AND OFF-AXIS, GUIDED FEEL
5 = OMNI DIRECTIONAL; ROUND ON-AXIS, GUIDED FEEL

OPERATE FORCE

1 = 16 OZ

JOYSTICK OUTPUT 1 (4)

AA = 2.5+/-2.0 VDC
BB = 2.5+/-2.0 VDC
CC = 2.5+/-2.0 VDC
DD = 2.5+/-1.5 VDC
EE = 2.5+/-1.5 VDC
FF = 2.5+/-1.5 VDC
GG = 0.5-4.5 VDC
HH = 1-4 VDC

JOYSTICK OUTPUT 2 (5)

NONE
2.5+/-2.0 VDC
2.5-/+2.0 VDC
NONE
2.5+/-1.5 VDC
2.5-/+1.5 VDC
0.5-4.5 VDC
1-4 VDC

TERMINATION

1 = 24 AWG WIRE LEADS

P9 BUTTON COLOR

N = NONE (8)
1 = RED
2 = BLACK
3 = ORANGE
4 = YELLOW
5 = GREEN
6 = BLUE
7 = PURPLE
8 = GRAY
9 = WHITE

(9)

JHT-_ _ _ _ _ _ _ _			
REV	OCN #	DATE	APR
A	059022	20 DEC 10	DCF
B	061838	20 JUN 11	MRM
C	064410	06 JAN 12	MRM
D	064707	31 JAN 12	DCF
E	065360	30 MAR 12	DCF
F	070007	08 APR 13	KLW
G	070711	30 MAY 13	KLW

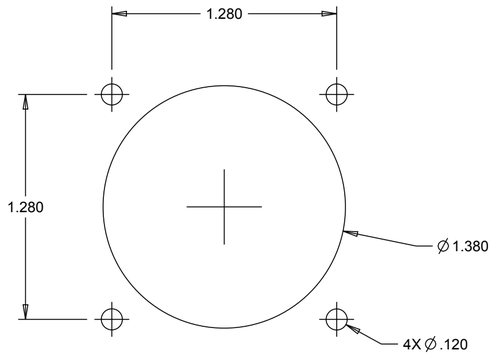

SUGGESTED PANEL OPENING
MAX. PANEL THICKNESS OF 0.140

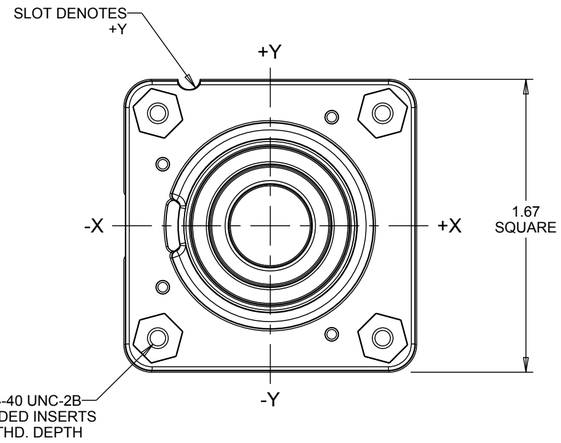

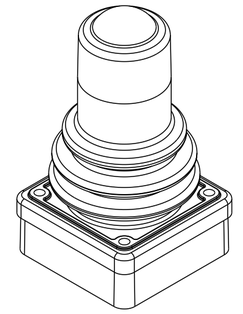

SCALE 4:5

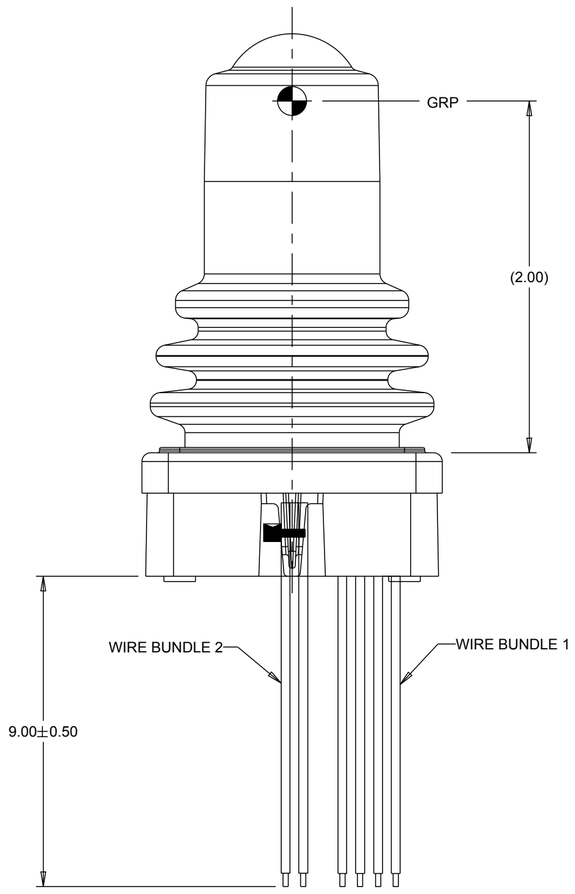

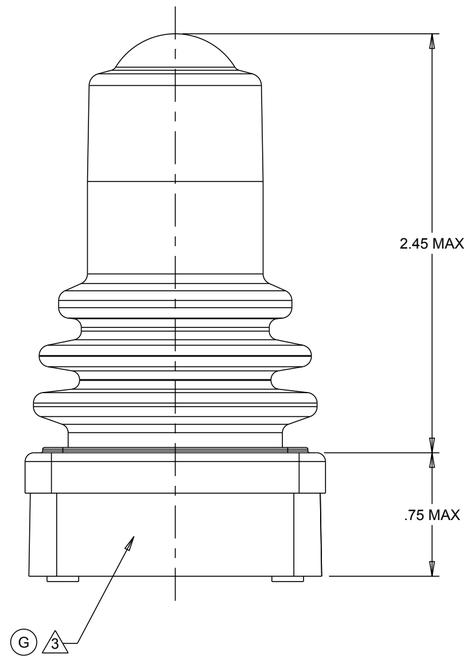

WIRES NOT SHOWN IN ALL VIEWS FOR CLARITY

MANUFACTURING
SPC
SR SPECIAL REQUIREMENT

UNLESS OTHERWISE SPECIFIED: DIMENSIONS ARE IN INCHES.
TOLERANCES:
.XX ±.03
.XXX ±.010
ANGLES ±2°
DO NOT SCALE

OTTO
CARPENTERSVILLE, ILLINOIS USA

THIS DOCUMENT IS THE CONFIDENTIAL PROPERTY OF OTTO ENGINEERING, INC.. IT IS NOT TO BE USED IN ANY WAY DETRIMENTAL TO THE INTERESTS OF OTTO ENGINEERING, INC..

DESCRIPTION
JHT, LINEAR HALL EFFECT JOYSTICK

DRWN. JLW	SIZE	FSCM NO	DRAWING NO.	REV.
CHKD. MRM	C	21649	JHT-_ _ _ _ _ _ _ _	G
APPD. AH				
		THIRD ANGLE PROJECTION	Scale 3:2	Sheet 1 OF 4

PRODUCT SPECIFICATIONS

ELECTRICAL:				
JOYSTICK				
RATED AT Vcc = 5V @ 20°C LOAD = 1ma (4.7KΩ)	UNITS	MIN	TYP	MAX
SUPPLY VOLTAGE	VDC	4.50	5.00	5.50
OUTPUT VOLTAGE TOLERANCE AT CENTER (SEE APPROPRIATE GRAPH FOR OUTPUT VOLTAGES)	VDC @5V Vcc	-.25	N/A	+.25
OUTPUT VOLTAGE TOLERANCE FULL TRAVEL (SEE APPROPRIATE GRAPH FOR OUTPUT VOLTAGES)	VDC @5V Vcc	-.25	N/A	+.25
SUPPLY CURRENT PER OUTPUT B=0, Vcc=5V, 1o=0	mA	N/A	10	12
OUTPUT IMPEDANCE	kΩ	N/A	1.0	N/A
P9				
CIRCUIT	SPST-NO-DB			
JOYSTICK Z AXIS RETURN TO CENTER				
RATED AT Vcc = 5V @ 20°C LOAD = 1ma (4.7KΩ)	UNITS	MIN	TYP	MAX
SUPPLY VOLTAGE	VDC	4.50	5.00	5.50
OUTPUT 1+2 VOLTAGE, +Z, -Z 0° DEFLECTION	VDC @5V Vcc	2.25	2.50	2.75
OUTPUT 1+2 AT FULL TRAVEL +Z DIRECTION	VDC @5V Vcc	4.25	4.50	4.55
OUTPUT 1+2 AT FULL TRAVEL -Z DIRECTION	VDC @5V Vcc	0.45	0.50	0.75
SUPPLY CURRENT (PER SENSOR) B=0, Vcc=5V, 1o=0	mA	NA	NA	10
OUTPUT SOURCE CURRENT LIMIT B=-X*, Vo=0	mA	-1.0	NA	1.0
JOYSTICK Z AXIS FRICTION				
RATED AT Vcc = 5V @ 20°C LOAD = 1ma (4.7KΩ)	UNITS	MIN	TYP	MAX
SUPPLY VOLTAGE	VDC	4.50	5.00	5.50
OUTPUT 1+2 AT FULL TRAVEL +Z DIRECTION	VDC @5V Vcc	4.25	4.50	4.55
OUTPUT 1+2 AT FULL TRAVEL -Z DIRECTION	VDC @5V Vcc	0.45	0.50	0.75
SUPPLY CURRENT (PER SENSOR) B=0, Vcc=5V, 1o=0	mA	NA	NA	10
OUTPUT SOURCE CURRENT LIMIT B=-X*, Vo=0	mA	-1.0	NA	1.0
JOYSTICK Z AXIS 3 DETENT				
RATED AT Vcc = 5V @ 20°C LOAD = 1ma (4.7KΩ)	UNITS	MIN	TYP	MAX
SUPPLY VOLTAGE	VDC	4.50	5.00	5.50
OUTPUT 1+2 VOLTAGE, +Z, -Z 0° DEFLECTION	VDC @5V Vcc	2.25	2.50	2.75
OUTPUT 1+2 AT FULL TRAVEL +Z DIRECTION	VDC @5V Vcc	4.25	4.50	4.55
OUTPUT 1+2 AT FULL TRAVEL -Z DIRECTION	VDC @5V Vcc	0.45	0.50	0.75
SUPPLY CURRENT (PER SENSOR) B=0, Vcc=5V, 1o=0	mA	NA	NA	10
OUTPUT SOURCE CURRENT LIMIT B=-X*, Vo=0	mA	-1.0	NA	1.0
MECHANICAL:				
JOYSTICK				
MECHANICAL LIFE ALL DIRECTIONS	5,000,000 CYCLES			
TRAVEL ANGLE	DEGREES	18	20	22
OVER TRAVEL ANGLE	DEGREES	0.5	1.0	1.5
MAX ALLOWABLE RADIAL FORCE (STYLES 11, 12, & 21) @ GRP	LBS	N/A	N/A	50
MAX ALLOWABLE RADIAL FORCE (ALL OTHER STYLES) @ GRP	LBS	N/A	N/A	15
P9				
MECHANICAL LIFE	1,000,000 CYCLES			
OPERATING FORCE @ 20°C	OZ	8	12	16
KEYPAD				
MECHANICAL LIFE	1,000,000 CYCLES			
OPERATIONAL FORCE	OZ	2	4	6
Z AXIS				
MECHANICAL LIFE ALL DIRECTIONS	1,000,000 CYCLES			
TRAVEL ANGLE (TOTAL)	DEGREES	56	60	64
OPERATIONAL TORQUE WITH DETENT	IN-OZ	10	20	30
OPERATIONAL TORQUE WITH FRICTION HOLD	IN-OZ	1	4	7
OPERATIONAL TORQUE RETURN TO CENTER	IN-OZ	8	16	24
MAXIMUM ALLOWABLE ROTATIONAL TORQUE	IN-LBS	N/A	N/A	15
ENVIRONMENTAL:				
OPERATING TEMPERATURE	°C	-40	20	85
KEYPAD				
ELECTRONICS SEAL INTEGRITY	WATERTIGHT TO IP65			
JOYSTICK				
ELECTRONICS SEAL INTEGRITY	WATERTIGHT TO IP68S, 1 METER			
EMI/RFI WITHSTAND	PER SAE J1113 CONTACT FACTORY FOR DETAILS			
MATERIAL:				
HOUSING	THERMOPLASTIC, BLACK			
BELLOWS	SILICONE, BLACK			
HARDWARE	NOT PROVIDED			

G

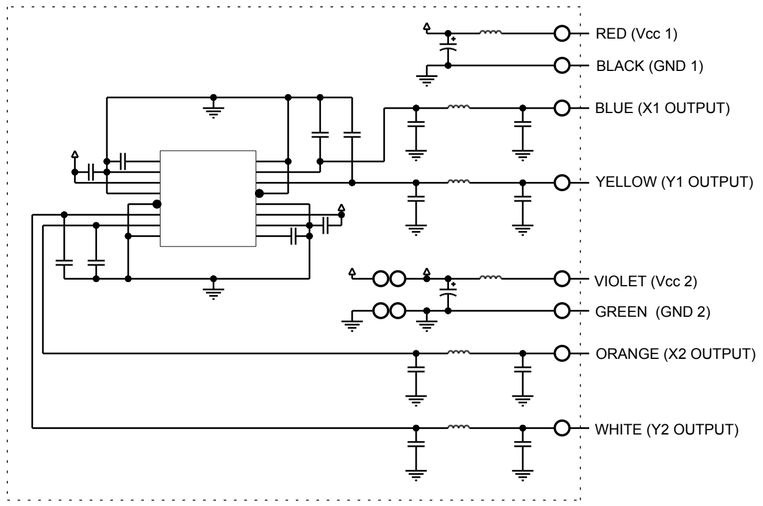

GENERAL SCHEMATIC

(WIRE BUNDLE 1)
ALL OUTPUTS ARE NOT PRESENT IN ALL CONFIGURATIONS

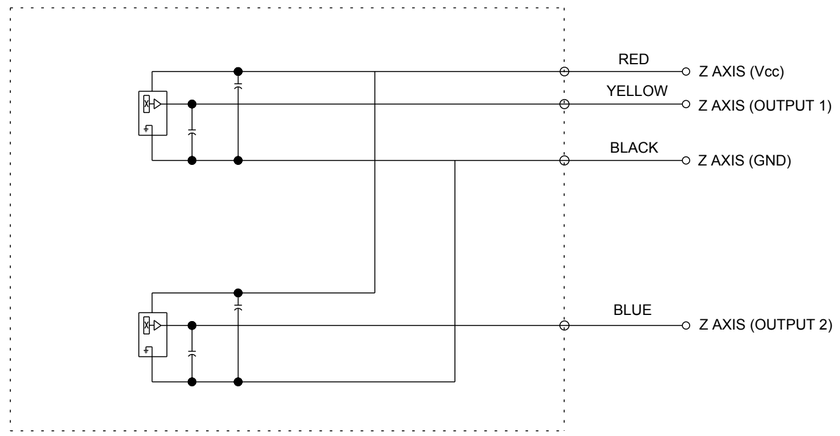

Z AXIS SCHEMATIC

(WIRE BUUNDLE 2)
ALL WIRES ARE NOT PRESENT IN ALL CONFIGURATIONS

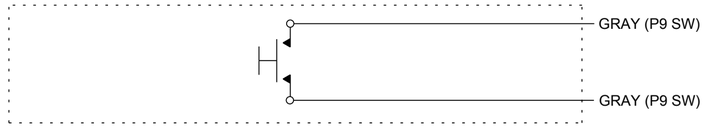

PUSHBUTTON SCHEMATIC

(WIRE BUNDLE 2)
ALL WIRES ARE NOT PRESENT IN ALL CONFIGURATIONS

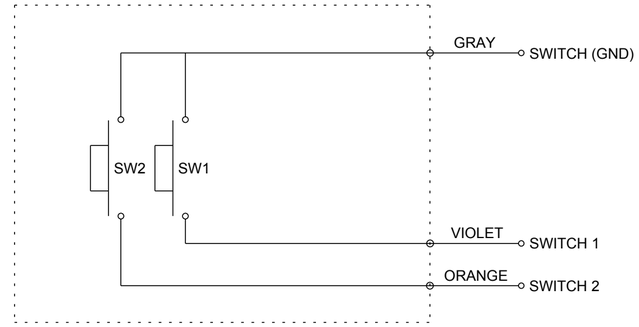

KEYPAD SCHEMATIC

(WIRE BUNDLE 2)
ALL WIRES ARE NOT PRESENT IN ALL CONFIGURATIONS

UNLESS OTHERWISE SPECIFIED DIMENSIONS ARE IN INCHES. TOLERANCES ARE AS LISTED. MUST BE FREE FROM BURRS AND SHARP EDGES	TOLERANCES .XX ±.03 .XXX ±.010 ANGLES ±2° DO NOT SCALE DRAWING	THIS DOCUMENT IS THE CONFIDENTIAL PROPERTY OF OTTO ENGINEERING, INC.. IT IS NOT TO BE USED IN ANY WAY DETRIMENTAL TO THE INTERESTS OF OTTO ENGINEERING, INC..	DRWN. JLW CHKD. MRM APPD. AH	SIZE C	FSCM NO 21649
DRAWING NO. JHT-_ _ _ _ _ _ _ _ _	REV. G				
THIRD ANGLE PROJECTION	Scale 1:1	Sheet 2 OF 4			

OPTION AA

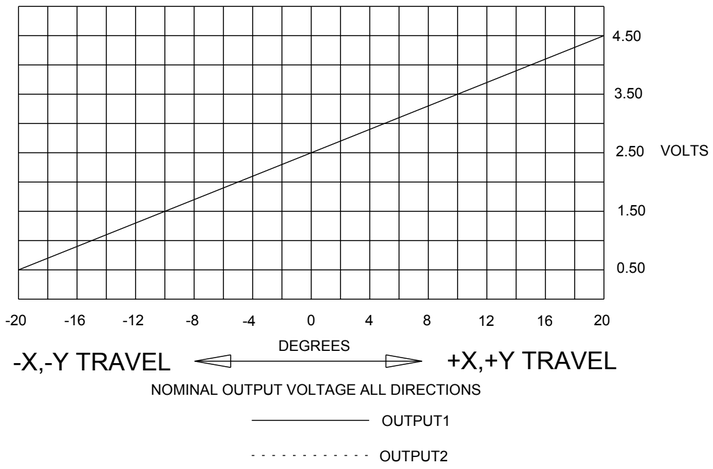

OPTION BB

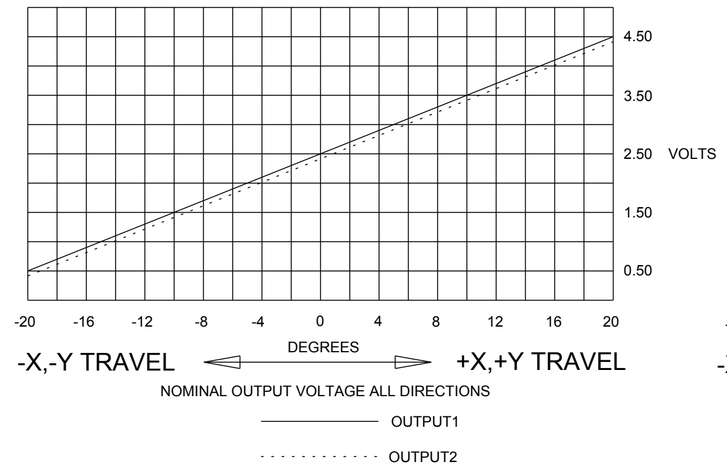

OPTION CC

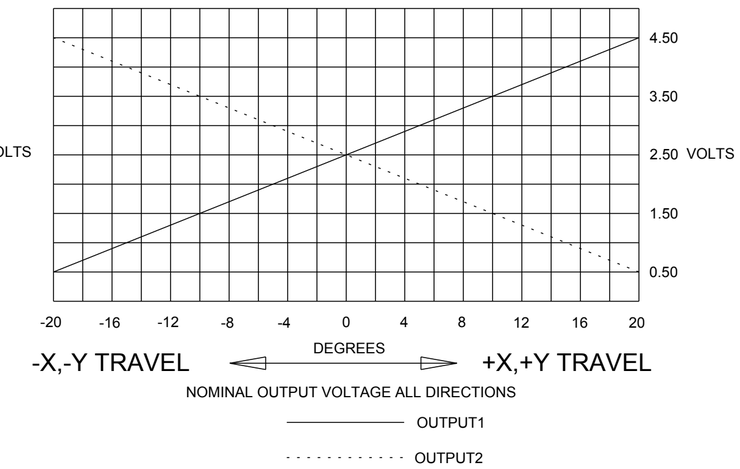

OPTION DD

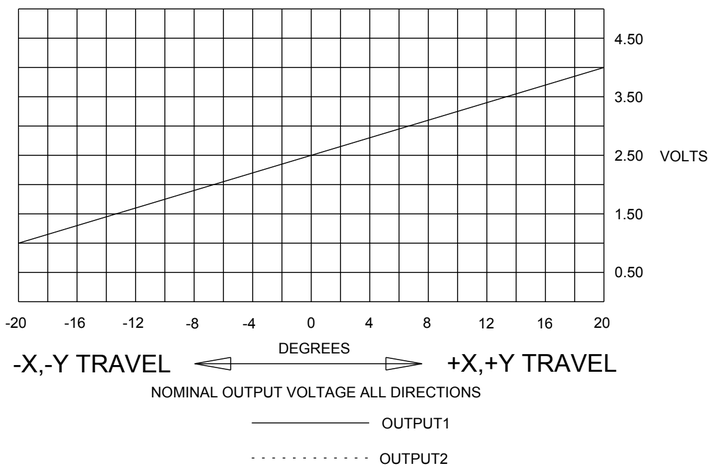

OPTION EE

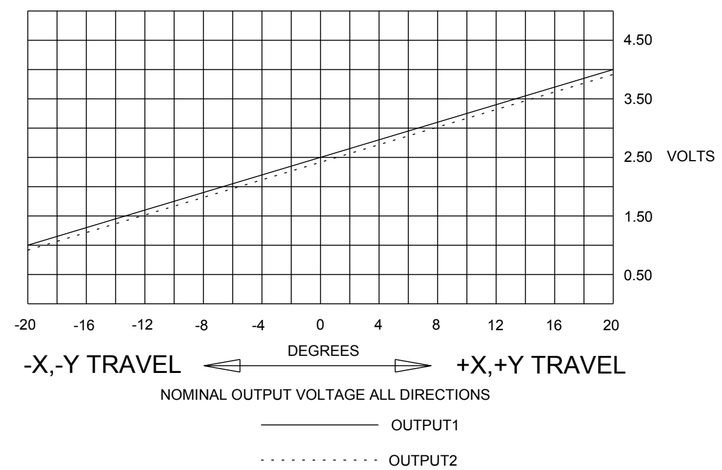

OPTION FF

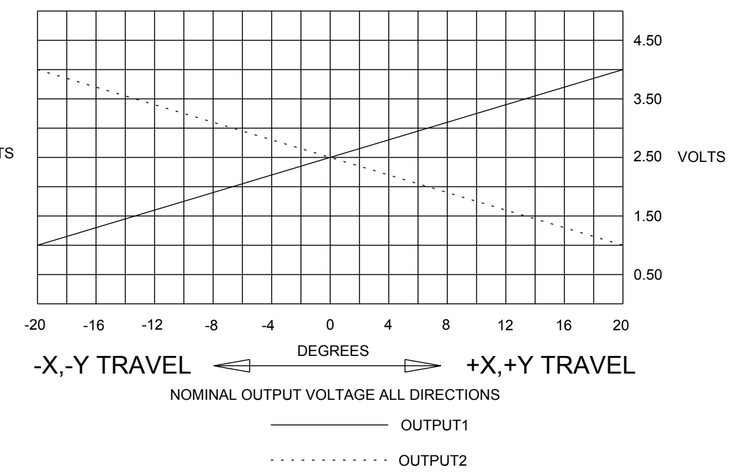

OPTION GG

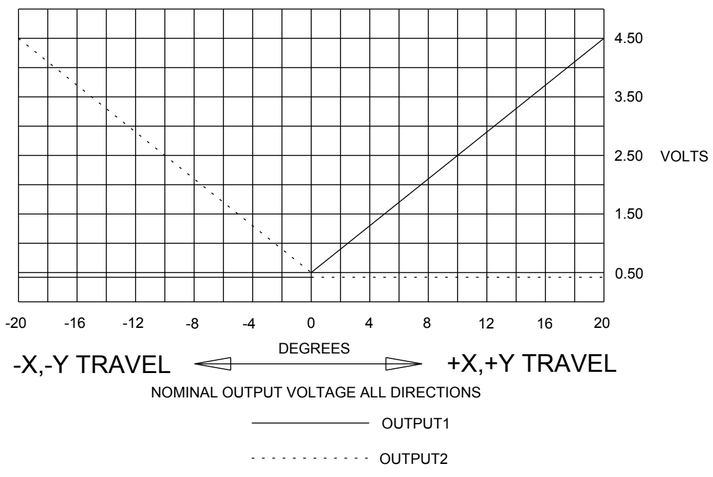

OPTION HH

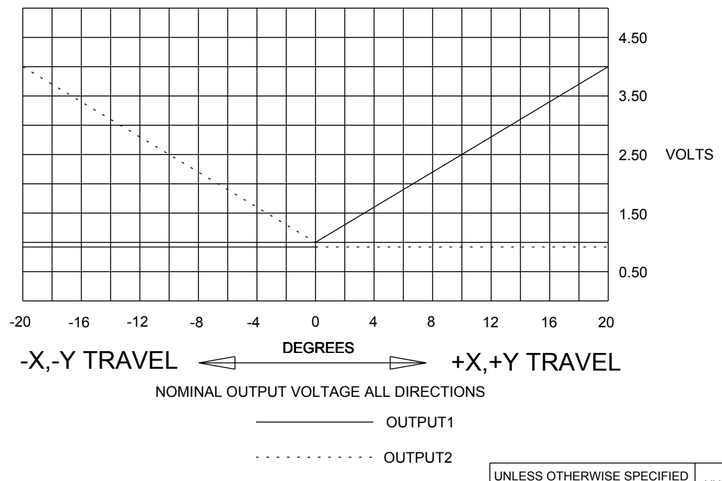

UNLESS OTHERWISE SPECIFIED DIMENSIONS ARE IN INCHES. TOLERANCES ARE AS LISTED. MUST BE FREE FROM BURRS AND SHARP EDGES	TOLERANCES .XX ±.03 .XXX ±.010 ANGLES ±2° DO NOT SCALE DRAWING	THIS DOCUMENT IS THE CONFIDENTIAL PROPERTY OF OTTO ENGINEERING, INC.. IT IS NOT TO BE USED IN ANY WAY DETRIMENTAL TO THE INTERESTS OF OTTO ENGINEERING, INC..	DRWN. JLW CHKD. MRM APPD. AH WT.	SIZE C	FSCM NO 21649 THIRD ANGLE PROJECTION	DRAWING NO. JHT-_ _ _ _ _ _ _ _ Scale 1:1	REV. G Sheet 3 OF 4

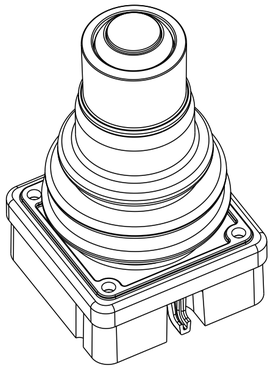

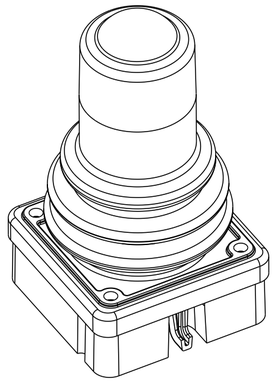

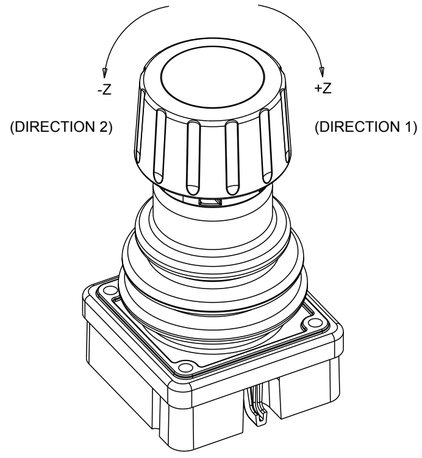

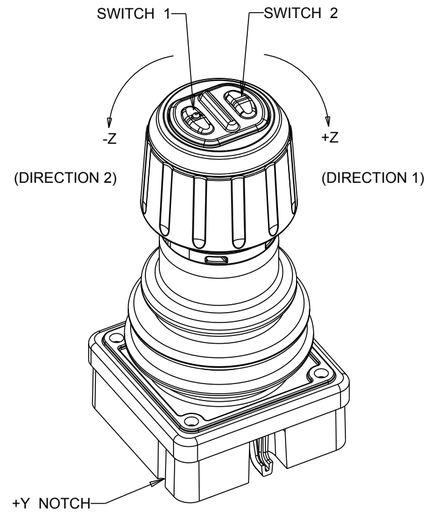

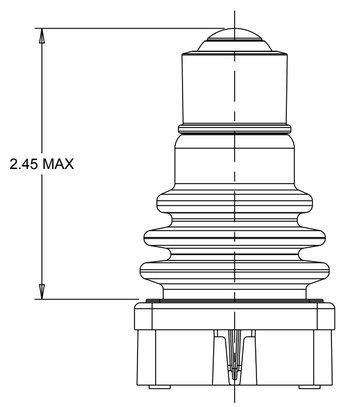

HALF BOOT

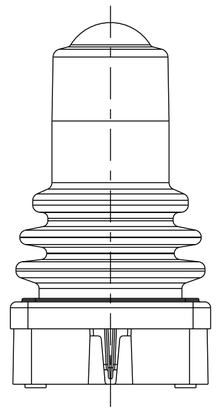

FULL BOOT

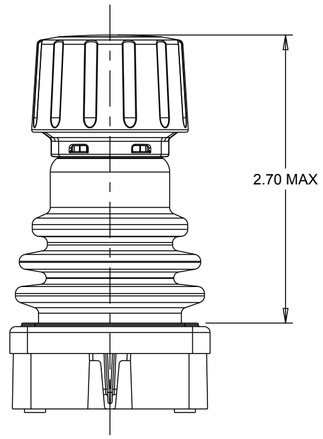

Z AXIS

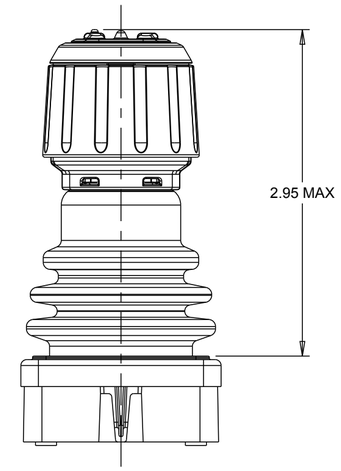

Z AXIS WITH PUSHBUTTONS

SWITCH / STYLE BOOT CONFIGURATION

UNLESS OTHERWISE SPECIFIED DIMENSIONS ARE IN INCHES. TOLERANCES ARE AS LISTED. MUST BE FREE FROM BURRS AND SHARP EDGES	TOLERANCES .XX ±.03 .XXX ±.010 ANGLES ±2° DO NOT SCALE DRAWING	THIS DOCUMENT IS THE CONFIDENTIAL PROPERTY OF OTTO ENGINEERING, INC.. IT IS NOT TO BE USED IN ANY WAY DETRIMENTAL TO THE INTERESTS OF OTTO ENGINEERING, INC..	DRWN. JLW CHKD. MRM APPD. AH	SIZE C	FSCM NO 21649	DRAWING NO. JHT-_ _ _ _ _ _ _ _	REV. G
					THIRD ANGLE PROJECTION	Scale 1:1	Sheet 4 OF 4