

Features/Benefits

- *Compact size*
- *Range of 4 actuation forces*
- *Excellent tactile feel*
- *ESD protection*
- *Extra large actuator*
- *IP 40 sealing*
- *RoHS compliant and compatible*

Typical Applications

- *Automotive*
- *Cellular phones*
- *Industrial electronics*
- *Computers & network equipment*

Specification

FUNCTION: momentary action
CONTACT ARRANGEMENT: 1 make contact = SPST, N.O.
TERMINALS: Gullwing type for SMT

Mechanical

MAXIMUM ACTUATING FORCE/LIFE: 20 N for 1,000 cycles

Type	Operating force Newtons (grams)	Operating life (operations)	Travel
KMR211G/213G	1.2 (120) ± 0.30	200,000	0,20 ± 0,10
KMR221G/223G	2.0 (200) ± 0.50	200,000	0,25 ± 0,10
KMR231G/233G	3.0 (300) ± 0.75	100,000	0,25 ± 0,10
KMR241G/243G	4.0 (400) ± 1.00	100,000	0,30 ± 0,10

Packaging

Switches are delivered in tape and reels of 7,000 pieces. The reel diameter is 330 (12.992). The tape dimensions conform to the EIA-RS-481 and EC-286-6 norms.

NOTE: Part numbers listed above do not represent all possible configurations.
For information on specific and custom switches, consult Customer Service Center.

Electrical

	Silver	Gold
MAXIMUM POWER:	1 VA	0.2 VA
MAXIMUM VOLTAGE:	32 VDC	32 VDC
MAXIMUM CURRENT DC:	50 mA	10 mA
MINIMUM CURRENT DC:	1 mA	1 mA

CONTACT RESISTANCE: ≤ 100 mΩ
INSULATION RESISTANCE: ≥ 1 GΩ
BOUNCE TIME: ≤ 1 ms

Environmental

	Silver	Gold
OPERATING TEMPERATURE:	-40°C to 85°C	-40°C to 125°C
STORAGE TEMPERATURE:	-55°C to 85°C	-55°C to 125°C

Process

Compatible with infrared reflow, lead free soldering and pick and place SMT machines.

How To Order

Our easy build-a-switch concept allows you to mix and match options to create the switch you need. To order, select desired option from each category and place it in the appropriate box.

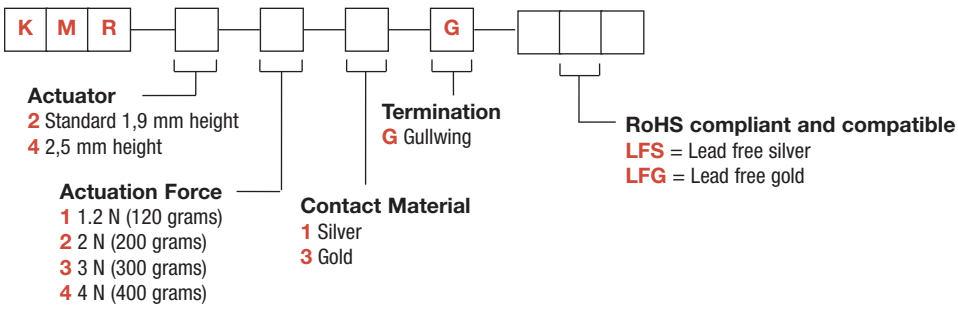

KMR



KMR211G

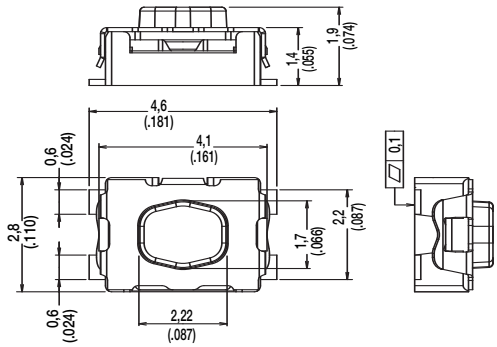

PAD LAYOUT

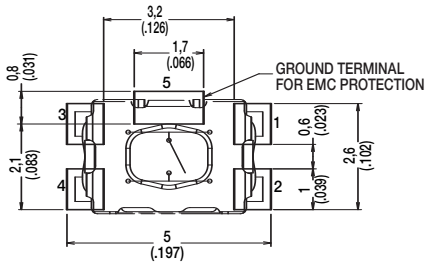

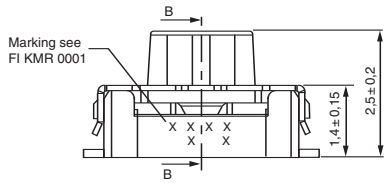

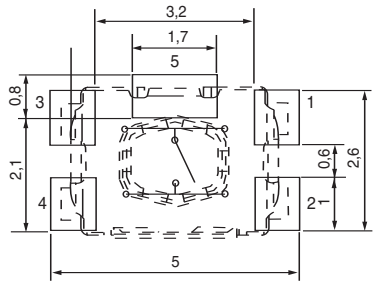

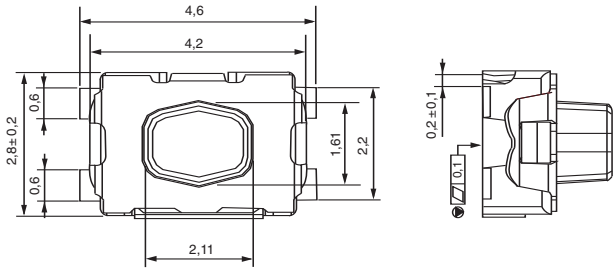

KMR411G

TAPE & REEL

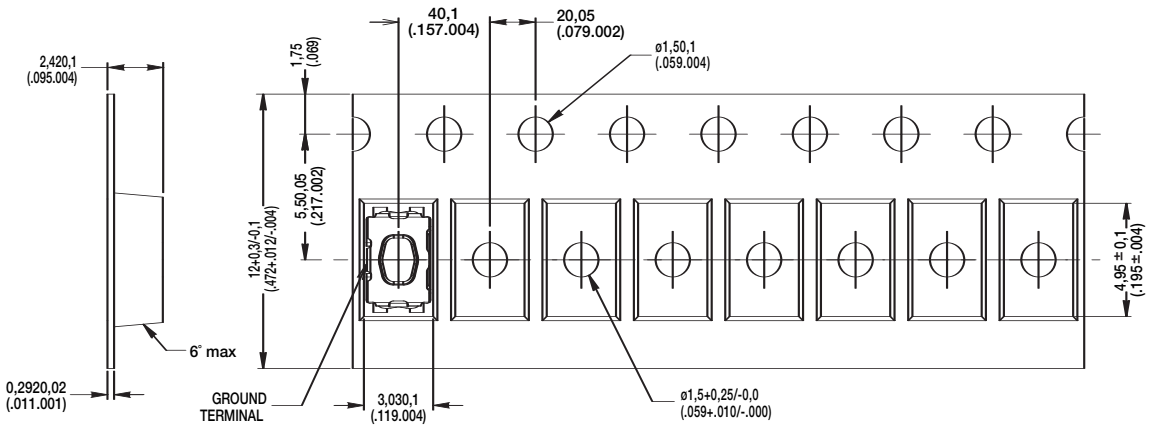

DIRECTION OF FEED

First Angle Projection

Dimensions shown in: mm (inch)
Specifications and dimensions subject to change